FINANCIAL ASSISTANCE
FUNDING OPPORTUNITY ANNOUNCEMENT

ADVANCED RESEARCH PROJECTS AGENCY – ENERGY (ARPA-E)
U.S. DEPARTMENT OF ENERGY

COOLING OPERATIONS OPTIMIZED FOR LEAPS IN ENERGY, RELIABILITY, AND CARBON HYPEREFFICIENCY FOR INFORMATION PROCESSING SYSTEMS (COOLERCHIPS)

Announcement Type: Initial Announcement
Funding Opportunity No. DE-FOA-0002851
CFDA Number 81.135

Funding Opportunity Announcement (FOA) Issue Date:	September 22, 2022
First Deadline for Questions to ARPA-E-CO@hq.doe.gov:	5 PM ET, October 16, 2022
Submission Deadline for Concept Papers:	9:30 AM ET, October 26, 2022
Second Deadline for Questions to ARPA-E-CO@hq.doe.gov:	5 PM ET, TBD
Submission Deadline for Full Applications:	9:30 AM ET, TBD
Submission Deadline for Replies to Reviewer Comments:	5 PM ET, TBD
Expected Date for Selection Notifications:	April 2023
Total Amount to Be Awarded	Approximately $42 million, subject to the availability of appropriated funds to be shared between FOAs DE-FOA-0002851 and DE-FOA-0002852.
Anticipated Awards	ARPA-E may issue one, multiple, or no awards under this FOA. Awards may vary between $500,000 and $10 million.

- For eligibility criteria, see Section III.A of the FOA.
- For cost share requirements under this FOA, see Section III.B of the FOA.
- To apply to this FOA, Applicants must register with and submit application materials through ARPA-E eXCHANGE (https://arpa-e-foa.energy.gov/Registration.aspx). For detailed guidance on using ARPA-E eXCHANGE, see Section IV.H.1 of the FOA.
- Applicants are responsible for meeting each submission deadline. Applicants are strongly encouraged to submit their applications at least 48 hours in advance of the submission deadline.
- For detailed guidance on compliance and responsiveness criteria, see Sections III.C.1 through III.C.4 of the FOA.

Questions about this FOA? Check the Frequently Asked Questions available at http://arpa-e.energy.gov/faq. For questions that have not already been answered, email ARPA-E-CO@hq.doe.gov (with FOA name and number in subject line); see FOA Sec. VII.A. Problems with ARPA-E eXCHANGE? Email ExchangeHelp@hq.doe.gov (with FOA name and number in subject line).

TABLE OF CONTENTS

REQUIRED DOCUMENTS CHECKLIST ..... **- 1 -**

I. FUNDING OPPORTUNITY DESCRIPTION ..... **- 2 -**

A. AGENCY OVERVIEW ..... - 2 -
B. PROGRAM OVERVIEW ..... - 3 -
1. EXECUTIVE SUMMARY ..... *- 3 -*
2. PROGRAM MOTIVATION ..... *- 5 -*
C. PROGRAM OBJECTIVES AND TECHNICAL AREAS OF INTEREST ..... - 8 -
D. PROGRAM BOUNDARY, TECHNICAL PERFORMANCE TARGETS AND DELIVERABLES ..... - 15 -
1. PROGRAM BOUNDARY AND TECHNICAL CATEGORIES ..... *- 15 -*
2. TECHNICAL PERFORMANCE TARGETS ..... *- 16 -*
3. PROGRAM STRUCTURE AND DELIVERABLES ..... *- 24 -*

II. AWARD INFORMATION ..... **- 25 -**

A. AWARD OVERVIEW ..... - 25 -
B. RENEWAL AWARDS ..... - 25 -
C. ARPA-E FUNDING AGREEMENTS ..... - 26 -
1. COOPERATIVE AGREEMENTS ..... *- 26 -*
2. FUNDING AGREEMENTS WITH FFRDCS/DOE LABS, GOGOS, AND FEDERAL INSTRUMENTALITIES ..... *- 26 -*
3. OTHER TRANSACTIONS AUTHORITY ..... *- 27 -*
D. STATEMENT OF SUBSTANTIAL INVOLVEMENT ..... - 27 -

III. ELIGIBILITY INFORMATION ..... **- 29 -**

A. ELIGIBLE APPLICANTS ..... - 29 -
1. INDIVIDUALS ..... *- 29 -*
2. DOMESTIC ENTITIES ..... *- 29 -*
3. FOREIGN ENTITIES ..... *- 29 -*
4. CONSORTIUM ENTITIES ..... *- 30 -*
B. COST SHARING ..... - 30 -
1. BASE COST SHARE REQUIREMENT ..... *- 30 -*
2. INCREASED COST SHARE REQUIREMENT ..... *- 31 -*
3. REDUCED COST SHARE REQUIREMENT ..... *- 31 -*
4. LEGAL RESPONSIBILITY ..... *- 32 -*
5. COST SHARE ALLOCATION ..... *- 32 -*
6. COST SHARE TYPES AND ALLOWABILITY ..... *- 32 -*
7. COST SHARE CONTRIBUTIONS BY FFRDCS AND GOGOS ..... *- 33 -*
8. COST SHARE VERIFICATION ..... *- 34 -*
C. OTHER ..... - 34 -
1. COMPLIANT CRITERIA ..... *- 34 -*
2. RESPONSIVENESS CRITERIA ..... *- 35 -*
3. SUBMISSIONS SPECIFICALLY NOT OF INTEREST ..... *- 36 -*
4. LIMITATION ON NUMBER OF SUBMISSIONS ..... *- 37 -*

IV. APPLICATION AND SUBMISSION INFORMATION ..... **- 38 -**

A. APPLICATION PROCESS OVERVIEW ..... - 38 -

1. *Registration in ARPA-E eXCHANGE* ..... - 38 -
2. *Concept Papers* ..... - 38 -
3. *Full Applications* ..... - 38 -
4. *Reply to Reviewer Comments* ..... - 39 -
5. *Pre-Selection Clarifications and "Down-Select" Process* ..... - 39 -
6. *Selection for Award Negotiations* ..... - 39 -

B. Application Forms ..... - 40 -
C. Content and Form of Concept Papers ..... - 40 -
1. *Concept Paper* ..... - 41 -
A. *Concept Summary* ..... - 41 -
B. *Innovation and Impact* ..... - 41 -
C. *Proposed Work* ..... - 41 -
D. *Team Organization and Capabilities* ..... - 42 -
D. Content and Form of Full Applications ..... - 42 -
E. Content and Form of Replies to Reviewer Comments ..... - 42 -
F. Intergovernmental Review ..... - 42 -
G. Funding Restrictions ..... - 42 -
H. Other Submission Requirements ..... - 42 -
1. *Use of ARPA-E eXCHANGE* ..... - 42 -

V. APPLICATION REVIEW INFORMATION ..... - 44 -

A. Criteria ..... - 44 -
1. *Criteria for Concept Papers* ..... - 44 -
2. *Criteria for Full Applications* ..... - 45 -
3. *Criteria for Replies to Reviewer Comments* ..... - 45 -
B. Review and Selection Process ..... - 45 -
1. *Program Policy Factors* ..... - 45 -
2. *ARPA-E Reviewers* ..... - 46 -
3. *ARPA-E Support Contractor* ..... - 46 -
C. Anticipated Announcement and Award Dates ..... - 47 -

VI. AWARD ADMINISTRATION INFORMATION ..... - 48 -

A. Award Notices ..... - 48 -
1. *Rejected Submissions* ..... - 48 -
2. *Concept Paper Notifications* ..... - 48 -
3. *Full Application Notifications* ..... - 48 -
B. Administrative and National Policy Requirements ..... - 48 -
C. Reporting ..... - 48 -

VII. AGENCY CONTACTS ..... - 49 -

A. Communications with ARPA-E ..... - 49 -
B. Debriefings ..... - 50 -

VIII. OTHER INFORMATION ..... - 51 -

A. Title to Subject Inventions ..... - 51 -
B. Government Rights in Subject Inventions ..... - 51 -

1. Government Use License ..... *- 52 -*
2. March-In Rights ..... *- 52 -*
C. Rights in Technical Data ..... - 52 -
D. Protected Personally Identifiable Information ..... - 53 -
E. FOAs and FOA Modifications ..... - 53 -
F. Obligation of Public Funds ..... - 54 -
G. Requirement for Full And Complete Disclosure ..... - 54 -
H. Retention of Submissions ..... - 54 -
I. Marking of Confidential Information ..... - 54 -
J. Compliance Audit Requirement ..... - 55 -
IX. GLOSSARY ..... - 56 -

REQUIRED DOCUMENTS CHECKLIST

For an overview of the application process, see Section IV.A of the FOA.

For guidance regarding requisite application forms, see Section IV.B of the FOA.

For guidance regarding the content and form of Concept Papers, Full Applications, and Replies to Reviewer Comments, see Sections IV.C, IV.D, and IV.E of the FOA.

SUBMISSION	COMPONENTS	OPTIONAL/ MANDATORY	FOA SECTION	DEADLINE
Concept Paper	• Each Applicant must submit a Concept Paper in Adobe PDF format by the stated deadline. The Concept Paper must not exceed 4 pages in length including graphics, figures, and/or tables, and must include the following: ○ Concept Summary ○ Innovation and Impact ○ Proposed Work ○ Team Organization and Capabilities	Mandatory	IV.C	9:30 AM ET, October 26, 2022
Full Application	[TO BE INSERTED BY FOA MODIFICATION IN DECEMBER 2022]	Mandatory	IV.D	9:30 AM ET, TBD
Reply to Reviewer Comments	[TO BE INSERTED BY FOA MODIFICATION IN DECEMBER 2022]	Optional	IV.E	5 PM ET, TBD

I. FUNDING OPPORTUNITY DESCRIPTION

A. AGENCY OVERVIEW

The Advanced Research Projects Agency – Energy (ARPA-E), an organization within the Department of Energy (DOE), is chartered by Congress in the America COMPETES Act of 2007 (P.L. 110-69), as amended by the America COMPETES Reauthorization Act of 2010 (P.L. 111-358), as further amended by the Energy Act of 2020 (P.L. 116-260):

"(A) to enhance the economic and energy security of the United States through the development of energy technologies that—
(i) reduce imports of energy from foreign sources;
(ii) reduce energy-related emissions, including greenhouse gases;
(iii) improve the energy efficiency of all economic sectors;
(iv) provide transformative solutions to improve the management, clean-up, and disposal of radioactive waste and spent nuclear fuel; and
(v) improve the resilience, reliability, and security of infrastructure to produce, deliver, and store energy; and
(B) to ensure that the United States maintains a technological lead in developing and deploying advanced energy technologies."

ARPA-E issues this Funding Opportunity Announcement (FOA) under its authorizing statute codified at 42 U.S.C. § 16538. The FOA and any cooperative agreements or grants made under this FOA are subject to 2 C.F.R. Part 200 as supplemented by 2 C.F.R. Part 910.

ARPA-E funds research on, and the development of, transformative science and technology solutions to address the energy and environmental missions of the Department. The agency focuses on technologies that can be meaningfully advanced with a modest investment over a defined period of time in order to catalyze the translation from scientific discovery to early-stage technology. For the latest news and information about ARPA-E, its programs and the research projects currently supported, see: http://arpa-e.energy.gov/.

ARPA-E funds transformational research. Existing energy technologies generally progress on established "learning curves" where refinements to a technology and the economies of scale that accrue as manufacturing and distribution develop drive improvements to the cost/performance metric in a gradual fashion. This continual improvement of a technology is important to its increased commercial deployment and is appropriately the focus of the private sector or the applied technology offices within DOE. By contrast, ARPA-E supports transformative research that has the potential to create fundamentally new learning curves. ARPA-E technology projects typically start with cost/performance estimates well above the level of an incumbent technology. Given the high risk inherent in these projects, many will fail to progress, but some may succeed in generating a new learning curve with a projected cost/performance metric that is significantly better than that of the incumbent technology.

ARPA-E funds technology with the potential to be disruptive in the marketplace. The mere creation of a new learning curve does not ensure market penetration. Rather, the ultimate value of a technology is determined by the marketplace, and impactful technologies ultimately become disruptive – that is, they are widely adopted and displace existing technologies from the marketplace or create entirely new markets. ARPA-E understands that definitive proof of market disruption takes time, particularly for energy technologies. Therefore, ARPA-E funds the development of technologies that, if technically successful, have clear disruptive potential, e.g., by demonstrating capability for manufacturing at competitive cost and deployment at scale.

ARPA-E funds applied research and development. The Office of Management and Budget defines "applied research" as an "original investigation undertaken in order to acquire new knowledge…directed primarily towards a specific practical aim or objective" and defines "experimental development" as "creative and systematic work, drawing on knowledge gained from research and practical experience, which is directed at producing new products or processes or improving existing products or processes."[1] Applicants interested in receiving financial assistance for basic research (defined by the Office of Management and Budget as "experimental or theoretical work undertaken primarily to acquire new knowledge of the underlying foundations of phenomena and observable facts")[2] should contact the DOE's Office of Science (http://science.energy.gov/). Office of Science national scientific user facilities (http://science.energy.gov/user-facilities/) are open to all researchers, including ARPA-E Applicants and awardees. These facilities provide advanced tools of modern science including accelerators, colliders, supercomputers, light sources and neutron sources, as well as facilities for studying the nanoworld, the environment, and the atmosphere. Projects focused on early-stage R&D for the improvement of technology along defined roadmaps may be more appropriate for support through the DOE applied energy offices including: the Office of Energy Efficiency and Renewable Energy (http://www.eere.energy.gov/), the Office of Fossil Energy and Carbon Management (https://www.energy.gov/fecm/office-fossil-energy-and-carbon-management), the Office of Nuclear Energy (http://www.energy.gov/ne/office-nuclear-energy), and the Office of Electricity (https://www.energy.gov/oe/office-electricity).

B. PROGRAM OVERVIEW

1. EXECUTIVE SUMMARY

Projects funded under the **C**ooling **O**perations **O**ptimized for **L**eaps in **E**nergy, **R**eliability and **C**arbon **H**yperefficiency for **I**nformation **P**rocessing **S**ystems (COOLERCHIPS) program will develop novel high performance, high reliability cooling systems for compute electronics. These cooling systems will enable a new class of power-dense computational systems, data centers,

[1] OMB Circular A-11 (https://www.whitehouse.gov/wp-content/uploads/2018/06/a11_web_toc.pdf), Section 84, pg. 3.
[2] OMB Circular A-11 (https://www.whitehouse.gov/wp-content/uploads/2018/06/a11_web_toc.pdf), Section 84, pg. 3.

and modular EDGE systems that will be cooled using 5% or less of the IT load at any location in the United States at any time of the year.

The COOLERCHIPS program will support the leveraging of recent nascent advances in thermal management, coolant flow technology, materials, manufacturing, design, controls, and reliability engineering. Illustrative example areas of interest include, but are not limited to:

- New materials, surface treatments, thermal interface solutions, manufacturing methods and conduction methods for improving heat transfer from chipsets;
- Advances in heat transfer to create and control 3D fluid structures with minimal thermal boundary layers;
- Innovations in cooling system engineering for reliability that address severity, occurrence and detectability of potential component failures and novel ideas that include system level risk mitigation, health monitoring and controls; and
- Novel modular data center or EDGE compute system designs that can operate high density compute systems at any time in any US location with highly efficient cooling systems.

The COOLERCHIPS FOA seeks to encourage the formation of multi-disciplinary teams to overcome the technology barriers for the development of high-performance cooling solutions that can simultaneously achieve the required system reliability and cost viability[3]. Proposing teams should incorporate expertise in relevant compute servers, heat transfer, reliability, modeling, data center techno-economics, data center operation, and commercialization.

ARPA-E has identified four Technical Categories for cooling system innovation opportunities. As detailed further in Section I.D.2, they will focus on transformative solutions that can deliver low cooling power consumption (≤ 5% of the IT load) while supporting high rack power density (≥ 126 kW/ 42U rack or equivalent[4]) at any time and any location in the US (targeting 0.4% design day targets analogous to ASHRAE methods[5,6]) and show a path to system reliability and cost similar to that of conventional data centers today[7].

Technical Category A will focus on innovations for heat removal from server chipsets to facility cooling systems. Such innovations could be applied in the compute room of existing data centers. Technical Category B will support innovations in modular data center systems where individual stand-alone module/pods are envisioned with high performance computing systems that can operate in any outside ambient environment. Technical Categories A and B will be supported by Technical Category C whose teams will develop and make available tools to

[3] Stolker-Walker, C. "Data Centers Are Facing a Climate Crisis", Wired online, Aug 2022, https://www.wired.com/story/data-centers-climate-change/
[4] Cabinets, R., Panels, and Associated Equipment, EIA/ECA Standard. EIA/ECA-310-E, 26 pages (Dec. 2005).
[5] ASHRAE, C., 2021. 14. Climatic Design Information.
[6] ASHRAE Handbook—Fundamentals (SI).
[7] https://uptimeinstitute.com/tiers

design and analyze data center and compute cooling systems with the capability to optimize their reliability and minimize their energy, CO_2 footprint, and cost at the system level. Further support will be provided by Technical Category D which will provide testing facilities for performance evaluation and technology transition to commercialization.

These Technology Categories are described in Section I.D of this FOA. Each application should be limited to only one Technical Category, although applicants may submit multiple applications for different Technical Categories and participate on multiple application teams. Additionally, applicants may submit multiple applications to the same Technical Category if the applications are scientifically distinct.

COOLERCHIPS will be structured as a program with a period of performance up to 36 months. In Technical Categories A and B, ARPA-E anticipates that awarded teams will initially execute an analytical/computational design effort and will reduce key risks through component and single server testing. At the middle of proposed period of performance, a Go/No-Go milestone is anticipated that will determine whether key risks have been sufficiently retired to proceed to the second half of the project in which teams will develop, fabricate, and test full size prototypes (rack scale testing for Technical Category A and full-scale modular data center/EDGE system for Technical Category B). See Section I.D.3, "Program Structure and Deliverables" for further details.

2. PROGRAM MOTIVATION

Vision

The COOLERCHIPS program seeks to support the development of transformational cooling technologies that will scale to the high rack power densities and low electronics case temperatures predicted for chipsets in the coming decades[8] and efficient cooling systems that will scale in size to be suitable for smaller, modular EDGE data centers for low-latency applications. Improved thermal system controls could lead to thermal stability and increased life of electronic parts and reduced electronic waste. Efficient cooling and higher heat rejection temperatures could lead to drastically reduced water consumption and increased potential for future waste heat reuse.

Scope

There are several ways to improve data center efficiency: power conversion, chip development, software and computational efficiency; these efforts are all important. However, it is difficult to predict the hardware and software architecture of future data centers. Nevertheless, every unit of electrical energy going into a data center must eventually be rejected as heat to the environment through a cooling system. The focus of COOLERCHIPS is to improve the efficiency of these cooling systems. COOLERCHIPS seeks thermal system solutions to this problem. Solutions involving chip design, power electronics improvements, and software architecture are outside the scope of this FOA.

[8] Emergence and Expansion of Liquid Cooling in Mainstream Data Centers, ASHRAE TC9.9, 2021

Data center energy consumption and environmental impact

Advanced computations form the basis of a growing portion of the scientific, engineering, and economic activity we see today. As more and more vehicles, robotics, medical systems, and other services and devices interact with large data sets and even may use artificial intelligence (AI) and machine learning (ML) in real time (machine to machine communication), further accelerated growth of this sector is expected[9]. The infrastructure for these computations and data storage is hosted by data servers in data centers. These latter can vary greatly in size, from a single data server in a building closet, to many rows of racks of servers in hyper scale data center and high-performance computing (HPC) facilities.

Global data center energy consumption is estimated to be in excess of 300 TWh[10], and US data centers have been estimated to utilize up to 2% of US electricity production[11]. Data center cooling can account up to 33-40% of data center energy usage depending on location and power density, and consumes hundreds of billions of gallons of water per year[12].

CO_2 emissions attributed to data centers come from two sources, embodied CO_2 and operational CO_2. Embodied CO_2 is related to the extraction and processing of raw materials used in the data center and its equipment. Operational CO_2 is related to the production of the energy consumed by the data center[13]. Studies have shown that the majority of CO_2 emissions attributed to data centers are due to operational CO_2[14], therefore COOLERCHIPS will focus on reducing data center operational energy use and related operational CO_2 footprint. Reducing embodied CO_2 is considered out of scope of this FOA.

Trends

The data center industry is predicted to grow with a compound annual growth rate (CAGR) of 20% towards 2030[15]. Data center power density is also expected to increase. Over the past decade, innovation in manufacturing methods has allowed for a consistent reduction in transistor size through lithography innovations and consequently compute performance per

[9] Cisco Annual Internet Report (2018–2023) https://www.cisco.com/c/en/us/solutions/collateral/executive-perspectives/annual-internet-report/white-paper-c11-741490.pdf

[10] R. Bashrousch and A. Lawrence, "Beyond PUE Tackling IT's Wasted Terawatts", https://uptimeinstitute.com/uptime_assets/80ae92ca9b8dfa363a077cb537f51870777499a39218906efc6d4e37e28ac3a0-beyond-pue-tackling-its-wasted-terawatts.pdf

[11] Masanet, Eric, Arman Shehabi, Nuoa Lei, Sarah Smith, and Jonathan Koomey. "Recalibrating global data center energy-use estimates." Science 367, no. 6481 (2020): 984-986.

[12] https://eta.lbl.gov/publications/united-states-data-center-energy

[13] Siddik, M., Shehabi, A. and Marston, L. The environmental footprint of data centers in the United States, Environ. Res. Lett. 16, 2021.

[14] Lettieri, D. J. (2012). Expeditious Data Center Sustainability, Flow, and Temperature Modeling: Life-Cycle Exergy Consumption Combined with a Potential Flow Based, Rankine Vortex Super- posed, Predictive Method

[15] https://www.globenewswire.com/news-release/2022/05/17/2444874/0/en/Hyperscale-Data-Center-Market-Forecasted-to-Garner-USD-285-63-Billion-by-2030-at-CAGR-of-20-76-Report-by-Market-Research-Future-MRFR.html

watt has steadily increased[16,17]. However, with lithography processes reaching fundamental limitations for scaling transistors even smaller, this pace is decreasing. This means that to sustain the accustomed rate of improvement in computational capability, the number of chips, or the power per chip will increase over the next decade. In addition, changes in chip package architecture have the potential to reduce the maximum allowable electronics case temperature[18,19]. These trends all result in significantly increased cooling challenges.

Large data centers are commonly built in locations where energy costs are low and climates are favorable, often at the expense of latency. Latency, the time it takes for data to travel between a server and its client and vice versa, is expected to be more important in the future for machines and processes to connect to data in real time. A potential future of EDGE micro and collocated data centers is envisioned[9] in which smaller data centers would be located close to the user, and therefore not be in ideal lowest cooling energy locations.

Recent weather events have caused extreme heat, droughts, and other challenges[20]. Providing solutions for data centers and compute services to operate anywhere efficiently and reject heat to ambient at higher temperatures, will enable a more uniform, distributed, and resilient critical compute infrastructure better suited to manage extreme weather events[21].

Thermal resistance reduction can raise facility temperature and reduce rejection energy or area

Although computer chipsets in servers typically operate at temperatures significantly above ambient environment (i.e. 70-90°C), common data center facilities keep supply coolants to the compute room in the range of 10-45°C due to high thermal resistance between the heat dissipating chip surfaces and the facility coolant[22]. In addition, sharing of the compute system space with operators and maintenance workers leads to compute rooms being cooled for human safety and comfort rather than optimized for energy efficiency of electronics cooling.

If a low thermal resistance between chips and facility coolant can be realized through innovations, and if innovations would be made to thermally separate compute electronics spaces from human operator spaces, coolants at higher temperatures could be used to cool servers—resulting in greatly reduced facility coolant system energy and water consumption.

---

[16] Shehabi, Arman, Sarah Smith, Dale Sartor, Richard Brown, Magnus Herrlin, Jonathan Koomey, Eric Masanet, Nathaniel Horner, Inês Azevedo, and William Lintner. "United states data center energy usage report." (2016).
[17] Shalf, J., 2020. The future of computing beyond Moore's Law. Philosophical Transactions of the Royal Society A, 378(2166), p.20190061.
[18] Chen, W. and Bottoms, B., 2019, June. Heterogeneous integration roadmap: Driving force and enabling technology for systems of the future. In 2019 Symposium on VLSI Technology (pp. T50-T51). IEEE.
[19] Fleischer, A.S., 2020. Cooling our insatiable demand for data. Science, 370(6518), pp.783-784.
[20] https://www.wired.com/story/data-centers-climate-change/
[21] https://www.theverge.com/2022/7/19/23270581/google-cloud-oracle-servers-outage-uk-cooling-failure
[22] ASHRAE, Thermal Guidelines for Data Processing Equipment, 5th edition, 2021

Trend data shows that innovation in traditional cooling methods has plateaued and transformative solutions are required to manage future higher power densities[23]. With these advances in mind, COOLERCHIPS will target a thermal resistance low enough to enable potential future 1000 W processors to be cooled with a coolant temperature of fewer than 10°C below case temperature. Such increase in heat rejection temperature raises the temperature of the ambient heat exchanger ($T_{heat\ exchanger}$) in the ambient heat rejection cooling loop and would significantly facilitate the ease of removal of heat (Q) from the facility to ambient ($T_{ambient}$) as the thermal resistance to ambient (1/hA) becomes less critical as described in the heat rejection equation:

$$Q = hA\left(T_{heat\ exchanger} - T_{ambient}\right)$$

Margin on this ambient thermal resistance (1/hA) could allow for reduction in heat transfer coefficient (h) by lowering external fan speed (at greatly reduced energy use) or reduction in size and area (A) of the heat exchanger, allowing for more modular cooling systems. High coolant temperatures would also increase potential for higher quality waste heat recovery for future applications.

Alternatively, this extra margin in cooling potential could be leveraged to lower chip temperature, which can lower the IT load energy and subsequent cooling energy need further[24]. It is anticipated that awarded teams will not only work on component technologies, but also develop system solutions that can be globally optimized for minimal energy and carbon footprint while maintaining acceptable reliability and cost at the data center system level.

C. PROGRAM OBJECTIVES AND TECHNICAL AREAS OF INTEREST

Data Center Types

The COOLERCHIPS program has two technical areas of interest: power-dense "typical" data centers and modular EDGE data centers. For the purposes of this program, a typical data center consists of racks of high-power servers in a compute room that is serviced by electrical power, a secondary cooling loop that transfers heat from the servers to the facility water, and a primary loop that transfers heat from the facility water to ambient as illustrated in **Figure 1.**

[23] R. Ascierto and A. Lawrence, "Uptime Institute global data center survey 2020", https://uptimeinstitute.com/uptime_assets/8160f3a6d5d83de52d132535575efcf1a5614c6fb69515b5ef91c8c8c1d611d1-2020-data-center-industry-survey.pdf

[24] Fallah, F. and Pedram, M., 2005. Standby and active leakage current control and minimization in CMOS VLSI circuits. IEICE transactions on electronics, 88(4), pp.509-519.

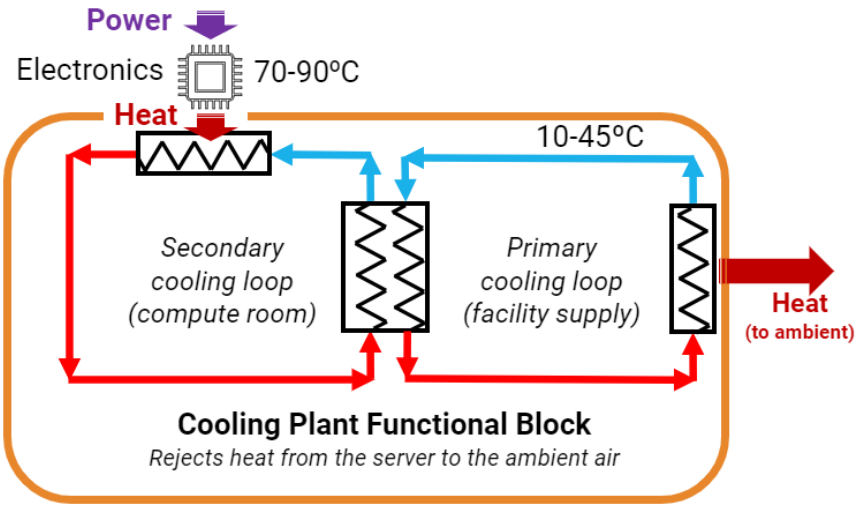

Figure 1: Simplified schematic of data center cooling loops

The secondary loop can be, for example, air circulation, air refrigeration, pressurized gas, liquid, or immersion coolant flow or any other mechanism to transport heat. The heat exchanger, fans/pumps, air handlers, reservoirs, filters, control logic or other balance of plant equipment for the secondary loop are typically housed in a Cooling Distribution Unit (CDU) or Compute Room Air Conditioning (CRAC) unit depending on the coolant medium. These can be either rack mounted or stand-alone units serving one or more racks. The primary loop is defined as the system that transfers heat from the facility water to ambient. The primary cooling loop is typically part of the building facility with a 4", 8" or larger supply line and rejects this heat to a centralized cooling plant where a combination of chillers, wet coolers, and dry coolers is used to reject heat to ambient.

Modular EDGE data centers are self-contained units that contain full or partial racks of servers and all supporting equipment including the cooling system. Modular data centers may be manned or unmanned during normal operation. Modular data center cooling systems may consist of both a primary and secondary cooling loop as shown in **Figure 1** or may consist of a primary loop only as shown in **Figure 2**.

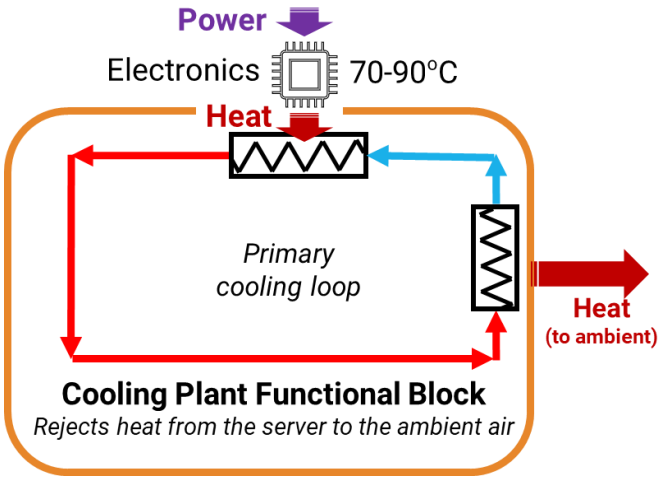

Figure 2: Simplified schematic of a modular data center with primary cooling loop only

Cooling System Energy Efficiency

COOLERCHIPS seeks to reduce the total cooling energy for both typical and modular EDGE data centers to 5% or less of the IT load. Total cooling energy is defined as the amount of energy needed to reject all heat from both the total IT load and the total non-IT load of the data center to the ambient. The total IT load is defined as the total energy of the functional compute components (processor, memory, and storage)[25]. The total non-IT load includes the entire balance of plant (such as server fans, coolant distribution units, controls, actuators, and pumps) as well as ancillary loads such as lighting, power supplies, conditioning of human-occupied spaces, and backup uninterruptable power facilities. The COOLERCHIPS program target for both typical and modular data centers can be expressed as:

$$\frac{\text{Total Cooling Energy}}{\text{Total IT load Energy}} \leq 5\%$$

Power Density

The COOLERCHIPS program anticipates that server power density will continue to rise. In order to ensure that COOLERCHIPS technologies will meet the challenges of the future, minimum volumetric rack power density targets (kW/m^3) shall be imposed that will apply to full or partial racks in both typical and modular data centers.

For the purposes of this FOA, the minimum server power target is 3 kW. A standard 42U rack, where "U" is the repeating vertical spacing unit, has 42 bays to hold servers and other rack-based equipment such as power supplies and CDUs. A full rack of 42 servers would draw a minimum power of 126 kW.

[25] Patterson, M.K., Poole, S.W., Hsu, C.H., Maxwell, D., Tschudi, W., Coles, H., Martinez, D.J. and Bates, N., 2013, June. TUE, a new energy-efficiency metric applied at ORNL's Jaguar. In International Supercomputing Conference (pp. 372-382). Springer, Berlin, Heidelberg.

The COOLERCHIP reference rack volume is 1.6 m^3, which is approximately the volume of a 42U rack with an attached rear door heat exchanger. The COOLERCHIPS power density target based on a reference rack power of 126 kW and a reference volume of 1.6 m^3 and is rounded up as follows:

$$\frac{\text{Power of compute system} + \text{Power of cooling system}}{\text{Volume of compute system} + \text{Volume of cooling system}} \geq 80\ \text{kW/m}^3$$

The volume of the cooling system includes the volume of any balance of plant or cooling distribution unit including the heat exchanger to the primary loop (either stand-alone or rack mounted) and should be simplified by one or more bounding boxes encompassing the outer dimensions of the systems. Connections from the secondary loop heat exchanger to the facility can be excluded from the volume of the cooling system but should be considered by applicants as they are relevant to industry needs (i.e. facility supply with 4" diameter). COOLERCHIP technologies that service partial racks shall also meet this power density target and in addition must have a minimum rack power of 10 kW.

Table 1: Power and power density targets

Minimum Partial rack power	≥ 10 kW
Power density	≥ 80 kW/m^3

It is important that chip and electronics cooling innovations are proposed on realistic server chipsets operating realistic workloads instead of simulated uniform heater systems.

Cooling Anytime, Anywhere

The total cooling energy for a typical or modular data center depends on the ambient dry bulb temperature, relative humidity, and atmospheric pressure. COOLERCHIPS seeks to reduce the total cooling energy to 5% of the IT load at any location in the United States. For the purposes of this FOA, the target ambient conditions for both typical and modular data centers are defined as 40°C dry bulb and 60% relative humidity at an atmospheric pressure of 101.3 kPa. These conditions are intentionally challenging and were selected by surveying the ASHRAE 0.4% cooling dry bulb temperature and mean corresponding wet bulb temperatures of several cities in the three hottest, most moist climate zones in the United States (Zones 1A, 2A, and 3A)[26].

Table 2: Target ambient conditions

Dry bulb temperature	40°C
Relative humidity	60%
Atmospheric pressure	101.3 kPa

[26] http://ashrae-meteo.info/v2.0/places.php?continent=North%20America

Developing energy efficient solutions for these extreme conditions means that cooling of data centers can be achieved at even greater efficiencies at locations with milder environments.

Environmental Impact

It is important that any new energy efficient solutions do not pose any new environmental challenges. Therefore, **Table 3** lists desired coolant environmental impact metrics for solutions proposed.

Table 3: Environmental impact metrics

Coolant global warming potential (GWP)	< 10
Coolant ozone depletion potential (ODP)	0

Cooling System Reliability

ARPA-E recognizes that new cooling technology will not be adopted by the industry unless it is proven to be at least as reliable as current state of the art cooling systems. ARPA-E therefore encourages teams to leverage reliability system engineering expertise from sectors like aerospace and automotive to develop models in which reliability of components can be modeled and overall system reliability can be evaluated. Individual components and connections with other components can be evaluated through failure mode effect analysis (FMEA) which ranks occurrence, severity, and detectability of failure modes. Multiple components can be arranged in a system model which propagates reliability potential of the system through mathematical methods like Markov Chain Monte-Carlo simulation[27]. Based on the outcome of such system analyses, it can then be identified whether innovations in design or hardware solutions are needed to reduce the occurrence of failures (i.e. more rugged parts), reduce severity of failure outcomes (make failure benign, use redundancy), or improve detectability (health monitoring and controls) of each component or subsystem. It is anticipated that reliability engineering methods and innovations applied to high performance cooling systems can produce cooling systems that have high heat transfer performance and reliability comparable to baseline cooling systems such that they can achieve uptime acceptable for the market (typically availability above 99%, ideally no maintenance required for the economic life of the server hardware).

Data center operators replace servers and other IT equipment as consumables at regular intervals based on reliability and economic life data[28]. Operating temperature and temperature gradients are factors that contribute to the reliability of the electronics[29]. Improved temperature management may lead to longer lifetimes for electronics; it is the intent that

[27] https://www.reliasoft.com/products/blocksim-system-reliability-availability-maintainability-ram-analysis-software/markov-diagrams

[28] Shah, J.M., Padmanaban, K., Singh, H., Duraisamy Asokan, S., Saini, S. and Agonafer, D., 2022. Evaluating the Reliability of Passive Server Components for Single-Phase Immersion Cooling. Journal of Electronic Packaging, 144(2).

[29] Wilcoxon, R., 2017. Does a 10 C Increase in Temperature Really Reduce the Life of Electronics by Half?. https://www.electronics-cooling.com/2017/08/10c-increase-temperature-really-reduce-life-electronics-half/

innovations proposed to COOLERCHIPS would result in similar or preferably longer replacement cycles, thus maintaining or reducing both cost and electronic waste.

Cooling System Cost

ARPA-E recognizes that new cooling technology will not be adopted by the industry unless the cost at scale is competitive with current cooling systems. The most important investment metrics are system payback time and investment rate of return (IRR). It is anticipated that although some cooling components in the compute room might become more complex and therefore have higher costs, savings can be realized by eliminating some plant cooling equipment and operating at higher power densities, and therefore potentially cost parity can be achieved at the system level. New coolant systems would need to enable data center system solutions that can realize equivalent and competitive payback time and IRR with today's systems at scale. Applicants should present a high-level baseline of cost of a relevant data center solution today and illustrate how their proposed solution will be economically competitive when realized at scale.

Examples of Potential Areas of Interest

Among other areas, the approaches described below are examples that can enable transformative enhancements of efficient, reliable, and cost-effective data center cooling systems. These areas are presented for illustration purposes only; ARPA-E is interested in all innovations that have the potential to meet the targets of the COOLERCHIPS FOA.

1. **Innovations in Materials and Interface Solutions.** Innovations in conduction and thermal interface systems include use of novel materials that are coefficient of thermal expansion matched to semiconductors such as ceramic 3D printing or machining of alumina or aluminum nitride heat spreaders[30] or silicon-based vapor chambers[31]. This allows for mechanically thinner contact layers as mechanical strain due to thermal cycling is reduced. Other novel thermal interface technologies include, but are not limited to, the use of carbon nanotubes[32] and direct spray cooling methods[33].
2. **Innovations in Convection Heat Transfer.** Convection heat transfer describes the thermal boundary layer that forms as a coolant interacts with a heat rejecting surface. As flow moves over a surface, a thermal boundary layer is formed that reduces the ability to transfer heat. Novel coolants or high-pressure gas systems could be of interest,

[30] deBock, P., Miorini, R., et al., 2020, October. Experimental Characterization of Heat Transfer and Thermal Energy Storage Capability Using Swirling Two-Phase Flow in the Package Integrated Cyclone COoler (PICCO). InterPACK 2019 (Vol. 84041, p. V001T07A013). American Society of Mechanical Engineers.

[31] Liu, T., Asheghi, M. and Goodson, K.E., 2021. Performance and manufacturing of silicon-based vapor chambers. Applied Mechanics Reviews, 73(1).

[32] Phillips, Makita R., Craig E. Green, and Baratunde A. Cola. "Numerical and experimental investigation of vertically aligned carbon nanotube-phase change material composites for thermal management of electronics." In 2018 17th IEEE Intersociety Conference on Thermal and Thermomechanical Phenomena in Electronic Systems (ITherm), pp. 141-146. IEEE, 2018.

[33] Walsh, S.M., Malouin, B.A., Browne, E.A., Bagnall, K.R., Wang, E.N. and Smith, J.P., 2018. Embedded microjets for thermal management of high power-density electronic devices. IEEE Transactions on Components, Packaging and Manufacturing Technology, 9(2), pp.269-278.

but would need to have a global warming potential (GWP) < 10 and an ozone depletion potential (ODP) of zero. New design and manufacturing capabilities allow for novel fluid structures that continuously disrupt the boundary layer in both single and two-phase systems[34,35,36]. Two-phase systems are more effective in realizing a high heat capacity rate but still have critical technical challenges that need to be overcome. Pool boiling systems often suffer from limited thermal performance, while evaporative thin film cooling systems are traditionally hard to manage and control in a dynamic, non-uniform heat flux realistic heat load environment such as a server processor. Novel technologies such as vapor venting systems[37,38] and surface coatings[39] have shown potential but can place strict requirements on the cleanliness of the coolant, making a practical system challenging. Immersion cooling allows for a continuous supply of coolant either through self-driven buoyancy or pumped flow[40]. Innovative transformational immersion concepts could potentially reduce the amount of fluid used, improve performance, reduce weight, and improve practical operation and acceptance as a system solution.

3. **Innovations in Cooling System Engineering for Reliability.** High system reliability could be achieved by reducing the occurrence and severity of potential failure modes by developing intelligent cooling systems that can analyze and predict potential failures through reliability system engineering. Recent focus on developing advanced fluid routing configuration models and analysis of potential failure mechanisms can be considered to develop more reliable systems[41]. Innovations to mitigate corrosion, erosion or fouling are of interest. Electrothermal-Control Co-Design has been pioneered for power electronics and refrigeration systems and could potentially be expanded to server and data center cooling systems optimization for reliability[42,43]. Recent advances

[34] Mandel, R.K., Bae, D.G. and Ohadi, M.M., 2018. Embedded two-phase cooling of high flux electronics via press-fit and bonded FEEDS coolers. Journal of Electronic Packaging, 140(3), p.031003.
[35] Miorini, R., Sharar, D., Gowda, A., Hoel, C., Whalen, B. and de Bock, P., 2022. A Novel Package-Integrated Cyclone Cooler for the Thermal Management of Power Electronics. Journal of Electronic Packaging, 144(2).
[36] Jung, K.W., Kharangate, C.R., Lee, H., Palko, J., Zhou, F., Asheghi, M., Dede, E.M. and Goodson, K.E., 2019. Embedded cooling with 3D manifold for vehicle power electronics application: Single-phase thermal-fluid performance. International Journal of Heat and Mass Transfer, 130, pp.1108-1119.
[37] David, M.P., Marconnet, A. and Goodson, K.E., 2008, January. Hydrodynamic and thermal performance of a vapor-venting microchannel copper heat exchanger. In International Conference on Nanochannels, Microchannels, and Minichannels (Vol. 48345, pp. 1363-1370).
[38] Rao Tamvada, S. and Moghaddam, S., 2022. Data center energy efficiency enhancement using a two-phase heat sink with ultra-high heat transfer coefficient. arXiv e-prints, pp.arXiv-2207.
[39] Khodakarami, S., Zhao, H., Rabbi, K.F. and Miljkovic, N., 2021. Scalable corrosion-resistant coatings for thermal applications. ACS applied materials & interfaces, 13(3), pp.4519-4534.
[40] Shah, J.M., Eiland, R., Rajmane, P., Siddarth, A., Agonafer, D. and Mulay, V., 2019. Reliability Considerations for Oil Immersion-Cooled Data Centers. Journal of Electronic Packaging, 141(2), p.021007.
[41] Yuruker, S.U., Mandel, R.K., McCluskey, P. and Ohadi, M., 2020, July. System-level thermal modeling and its significance in electronics packaging. In 2020 19th IEEE Intersociety Conference on Thermal and Thermomechanical Phenomena in Electronic Systems (ITherm) (pp. 510-519). IEEE.
[42] Wu, Y., Hoque, M.J., Mahmud, M.H., Allee, E.M., Lad, A.A., Zhao, Y., Mantooth, H.A. and Miljkovic, N., 2021. Electrothermal-Control Co-Design of an All Silicon Carbide 2× 250 kW Dual Inverter for Heavy-Duty Traction Applications. IEEE Transactions on Industry Applications, 58(1), pp.505-516.
[43] Jain, N., Koeln, J.P., Sundaram, S. and Alleyne, A.G., 2014. Partially decentralized control of large-scale variable-refrigerant-flow systems in buildings. Journal of Process Control, 24(6), pp.798-819.

in modular tools like EnergyPlus[44] and others have enabled more thorough analysis capabilities of cooling system energy use and CO_2 footprints[45]. It is the vision of ARPA-E that combining all these functionalities in a single modular extensible software toolkit that could model data center cooling system reliability, energy usage, CO_2 footprint, and cost could lead to advances and new levels of reliability and performance.

4. **Modular Data Center Compute Systems.** With needs for computational capability to be available at low latency closer to the user in EDGE solutions, modular data center compute systems are of interest[46]. Current modular data center concepts often employ standard rack configurations and are adaptations of larger data centers. It is of interest to explore how electronics can be embedded in specialized modular data center / compute pods for optimal energy efficiency and heat rejection such that heat can be rejected with minimal energy use. Recent work in bio-inspired thermal architecture[47,48] and advanced heat rejection technologies[49] also shows unique paths to advancing low-energy heat rejection from structures, and likely these systems will be even more energy and water efficient if heat can be rejected at higher temperatures through cooling system thermal resistance innovations.

D. PROGRAM BOUNDARY, TECHNICAL PERFORMANCE TARGETS AND DELIVERABLES

1. PROGRAM BOUNDARY AND TECHNICAL CATEGORIES

Scope

The COOLERCHIPS program seeks thermal system solutions to the problem of reducing energy used for cooling data centers. As such, solutions focused on chip design, internal chip cooling, power electronics design, software improvements, and data center buildings are considered out of scope. Waste heat reuse innovations are considered out of scope other than those that directly help reduce cooling energy and operational CO_2 footprint.

Technical Categories

The COOLERCHIPS program consists of four Technical Categories. Technical Category A will focus on innovations in the secondary cooling loop rejecting heat from the compute room electronics to the facility supply. Technical Category B will focus on modular data centers that reject heat from their internal compute systems to ambient. Technical Category C will develop

[44] https://www.energy.gov/eere/buildings/articles/spawn-energyplus-spawn

[45] Beshr, M., Aute, V., Abdelaziz, O., Fricke, B. and Radermacher, R., 2017. Potential emission savings from refrigeration and air conditioning systems by using low GWP refrigerants. The International Journal of Life Cycle Assessment, 22(5), pp.675-682.

[46] https://datacenterfrontier.com/scalable-modular-data-centers-and-the-race-to-roi/

[47] Aviv, D., Wang, Z., Meggers, F. and Ida, A., 2020. Surface Generation of Radiatively-Cooled Building Skin for Desert Climate.

[48] Aviv, Dorit, and Forrest Meggers. "Cooling oculus for desert climate–dynamic structure for evaporative downdraft and night sky cooling." Energy Procedia 122 (2017): 1123-1128.

[49] Mandal, J., Yang, Y., Yu, N. and Raman, A.P., 2020. Paints as a scalable and effective radiative cooling technology for buildings. Joule, 4(7), pp.1350-1356.

supporting software tools that can be used to predict energy usage, carbon footprint, reliability, and cost of the technologies developed in Technical Category A and Technical Category B. Technical Category D will focus on developing and standardizing protocols, best practices, interfaces, and operating facilities for testing the technologies produced by the Technical Category A and Technical Category B teams.

2. TECHNICAL PERFORMANCE TARGETS

The primary components of the COOLERCHIPS program are the two innovation Technical Categories: Technical Category A and Technical Category B. The COOLERCHIPS program intends to also award two support Technical Categories: Technical Category C and Technical Category D.

Technical Category A

Technical Category A will focus on innovations in the secondary cooling loop rejecting heat from the compute room electronics to the facility supply (see **Figure 1**) with minimal energy use through realizing a target chip surface to facility coolant supply thermal resistance of less than 0.01 K/W. It may be assumed that the primary cooling loop has a 4" connection to any heat exchanging equipment in the secondary cooling loop in the compute room and that the facility supply has a flow rate and coolant relevant to conventional data center cooling plant operations. Equipment that connects servers to the primary cooling loop such as heat exchangers, manifolds, pumps, cooling distribution units, and other fluid handling equipment is considered within the scope of Technical Category A.

The COOLERCHIPS target of total cooling energy ≤ 5% IT load applies to the data center as a whole. Assuming that 2% of energy is used by the primary loop to reject heat to ambient (see **Figure 1**), Technical Category A technologies shall have a total cooling energy target of ≤ 3% IT load.

The system-wide total cooling energy target of ≤ 5% IT load shall be verified by simulation, and the system reliability and cost shall be estimated by simulation. The simulations may use models developed by the teams themselves or by using software developed by a Technical Category C team. The secondary loop total cooling energy target of ≤ 3% IT load will be verified experimentally by the teams themselves using their own facility or using facilities provided by the Technical Category D team(s). Specific targets are presented in **Table 4**.

Table 4: Technical Category A Targets

Thermal Resistance, chip-to-coolant	• ≤ 0.01 K/W
Power Consumption	• Total cooling power of secondary loop including all ancillary equipment (CDUs, pumps, heat exchangers, etc.) ≤ 3% IT load (estimated by testing) • Total cooling power to reject all heat to ambient ≤ 5% IT load (estimated by simulation) at the ambient conditions specified in **Table 2**. In the case that any water evaporation is used; this must be reported in liters/kWh.

Power Density	• Power density ≥ 80 kW/m^3 ○ Includes volume of any balance of plant (CDUs, pumps, heat exchangers) that is either inside the rack or as stand-alone unit simplified as bounding box encompassing the outer dimensions of the system ○ Minimal partial rack power of > 10 kW
Coolant Environmental impact	• Coolant Global Warming Potential (GWP) < 10 • Coolant Ozone Depletion Potential (ODP) = 0
Reliability	• Use System Reliability modeling to project path to system availability of >99.982% (equivalent to Tier3 Uptime[7])
IT equipment replacement cycles	• IT equipment replacement cycles equivalent or longer than baseline
Cost	• Applicants are to present a high-level analysis demonstrating how the proposed cooling solution will be economically competitive compared to state-of-the-art ○ System model showing path to total system payback of 7 years ○ System model showing path to total system IRR ≥ 10%

Technical Category B

The focus of this category is the development of efficient, modular, all-in-one datacenters with compute power of 100 kW to beyond 1 MW that are volume-constrained to spur innovation in cooling process intensification. Prefabricated, modular datacenters offer several competitive advantages such as scalability and faster deployment (on the order of a few quarters compared to a few years for a traditional data center project).

Technical Category B will focus on modular EDGE data center designs that manage heat rejection from chipsets to ambient with minimal carbon footprint. This could be a single cooling loop optimized for the modular computing system or multiple loops as needed. These modular systems should operate as stand-alone outdoor units without the need for any external cooling facilities in any US environment.

For ease of deployment in any location, regardless of the climate, the envisioned modular datacenter should be prefabricated, and its shipping volume should not exceed a regular ISO 40 container. A standard ISO 40 container has the following external dimensions as defined by ISO 668 (1AA): length of 40 ft (12.192 m); width of 8 ft; (2.438 m); height of 8 ft 6 in (2.591 m); surface of 320 sq. ft (29.72 m^2); volume of 2720 cu ft (77 m^3). As > 1 MW is seen as a transformative target for the ISO 40 container volume, normalizing the volumetric power density of the modular data center and rounding up gives a target of at least 20 kW/m^3 for the entire modular data center (including all facilities, power supplies, back-up power and other relevant equipment). Smaller units can be proposed as long as this volumetric power density target and a minimum of 100 kW total compute power is met. The weight of the envisioned modular data center in this category should be reasonable as to facilitate its transportation on US roads or rail.

Technical Category B's scope is larger in development scope than Technical Category A. The dimensions of the modular EDGE data center during shipping should not exceed that of a standard ISO 40 container shipping container, such that it can be transported. However, no constraints are placed upon its shape and configuration. Technical Category B data centers should be designed to operate in any US climate zone and should not assume the availability of water.

The number of servers and internal rack size of the Technical Category B data centers is not constrained. The rack power density shall be at least 3 kW/U with at least 100 kW IT load overall.

Technical Category B modular EDGE data centers must use no more than 5% of the IT load power to reject heat from the chips to the ambient at any time and at any location as defined by **Table 2**. This power consumption target includes any pumps, fans, control electronics, coolant distribution units, heat exchangers, and any other device used to reject the heat from the chip to the ambient. As outdoor units, incoming solar radiation and other ambient conditions should be evaluated. The system-wide total cooling energy target of ≤ 5% IT load shall be verified experimentally by the teams themselves using their own facility or using facilities provided by the Technical Category D team(s). The system reliability and cost shall be estimated by simulation using models developed by the teams themselves or by using software developed by a Technical Category C team.

Technical Category B systems must include required, off the shelf power electronics to operate the modular data center effectively. Proposed solutions that meet the technical requirement set forth in this FOA for this category need to encompass components and system-level considerations and development to reduce the energetic overhead associated with cooling. The envisioned modular data center should not feature any net water consumption and must be self-contained except for electricity powering it. Innovation for this category focuses on both the IT space and cooling facility. Efficient cooling systems are needed in order to meet the stringent requirements set by this FOA - please see **Table 5** for more details.

Table 5: Technical Category B Targets

Power Density	• The compute power density of the entire modular datacenter, including the power functional block, the IT space functional block, and cooling functional block should be equal or greater than 20 kW/m^3
System Volume	• Not to exceed shipping volume of an ISO 40 shipping container
Ambient Conditions	• See **Table 2** • Compatible to operate in outdoor environment • Do not assume a water supply is available
Power Consumption	• Total cooling power to reject heat to ambient including all ancillary equipment (CDUs, pumps, etc.) ≤ 5% IT load (evaluated by testing) for any ambient conditions within the specified range. • Minimum compute power of 100 kW

Coolant Environmental impact	• Coolant Global Warming Potential (GWP) < 10 • Coolant Ozone Depletion Potential (ODP) = 0
Reliability	• Use system reliability modeling to project path to system availability of > 99.982% (equivalent to Tier3 Uptime)
IT equipment replacement cycles	• IT equipment replacement cycles equivalent or longer than baseline

Cost	• Applications are to present in their application a high-level analysis how the proposed cooling solution will be economically competitive compared to state-of-the-art
	  ○ System model showing path to total system payback of 7 years
	  ○ System model showing path to total system IRR ≥ 10%

Technical Category C

Technical Category C will produce extensible, user friendly, documented software that can be used by the Technical Category A and Technical Category B performer teams as a tool to model and simulate the overall data center energy usage, CO_2 footprint, reliability, and cost of the technologies developed simultaneously. Teams in Technical Category A and B will be encouraged to utilize the software developed in Technical Category C. Any software used by Technical Category A and B teams to report out these metrics need to demonstrate similar or equal quality of output as the Technical Category C developed software, as described here, for their particular system.

Technical Category C team(s) are envisioned to be multi-disciplinary and led by an integrator with proven years of experience in producing open source, extensible modeling codes and managing user communities. The teams must span combined expertise in fluid network modeling, energy modeling, reliability modeling, and realistic data center operational cost modeling. The software can be a stand-alone package or a modular extension to an existing software that is generally available.

Technical Category C project teams shall make the software developed under the COOLERCHIPS program available under open source (Open Source Software is defined as using a generally recognized open software standard such as those approved at http://opensource.org/osd). To the extent the software is a modular add-on that requires access to additional software not available as compatible open source, such additional software must be generally available to any users of the model.

In order to facilitate the modeling of a variety of cooling system configurations, the software shall include a library of standard cooling components with reasonable default parameters that can be altered by the user. The API for creating component models shall be well-documented

and sophisticated enough to create models of the Technical Category A and Technical Category B technologies. The component models shall have input fields that allow for parameters to be updated with experimentally measured data. The software will also calculate operational carbon footprint based on the energy results and suitable carbon emission factors.

The reliability modeling may use the same model as the energy modeling. The code shall include a library of standard cooling components with reasonable reliability parameters that can be altered by the user. Custom-created cooling component modules shall include reliability parameters entered by the user. In addition, reliability of connections or component-fluid interactions can also be considered. The software shall have the capability to provide a system reliability prediction based on a Markov-Chain Monte Carlo type simulation or equivalent method. Although the calculations themselves shall be done to appropriately high accuracy, the overall reliability predictions will be determined by the accuracy of the reliability parameters of components or connections entered by the Technical Category A and B teams. The software can have relevant physics-of-failure sub models to assist teams in determining the reliability of components. The system reliability model is intended to allow the teams to demonstrate a pathway to the reliability targets required by this FOA and to develop an understanding of the identification of key reliability parameters in the cooling system design. A user-friendly graphical interface is required.

The cost modeling capability will likely require input from an entity that has many years' experience in the development, design, building and financing of data centers. The model itself may be less granular than the energy and reliability models, but the model needs to be of sufficient accuracy to support investment decisions. The model shall have the capability to predict CAPEX and OPEX of the simulated data center under user-provided parameters, constraints, and conditions.

It is intended that the software developed in Technical Category C will deliver a unique capability of co-design and global optimization of a data center cooling system design using energy use, CO_2 footprint, reliability, and cost as simultaneous design optimization variables.

Table 6: Technical Category C Requirements

Team Requirements	• Demonstrated expertise in developing stand-alone or modular modeling software, software integration, energy modeling, reliability modeling and data center cost estimation

Code Requirements	• The software shall be able to model both traditional data centers and modular EDGE data centers (must support both Technical Category A and Technical Category B data centers)
	  ○ Include base library of common cooling components with reasonable default values for all parameters (pipes, fittings, turns, pumps, heat exchangers, etc.)
	  ○ Graphical user interface for building the data center model

	○ Code shall allow the modeled data center to be placed in any climate zone, and shall allow the user to specify average climate conditions or to upload hourly climate conditions ○ Energy, reliability, and cost analyses will be run using a common system model ○ Code shall estimate operational CO_2 emissions using national average or local carbon emission factors ○ Extensible: users shall be able to build custom component modules that will interface with the larger model ○ Well-documented API ○ Code shall estimate both CAPEX and OPEX of the simulated data center ○ Open-source (true open source preferred, no licensing fees necessary to run the software)
Release Schedule	• Software will be made available to the Technical Category A and B performers every 6 months as stand-alone software or as a modular add-on to common additional software that must be generally available to any users of the model for the duration of the program ○ The first released version at 6 months will have basic functionality of energy, reliability, CO_2 footprint, and cost analysis modeling capability, and it is anticipated that subsequent versions will have increased fidelity and capability updates in each of these areas based on further development and community input
Support	• Team will support a call with all Technical Category A and Technical Category B performers teams and collect input on how to further increase the functionality of the software every quarter • Team will provide user documentation to Technical Category A and Technical Category B performers with every software release and provide consulting on an as needed basis

Technical Category D

The Technical Category D teams will be responsible for developing and standardizing protocols, best practices, interfaces, and operating facilities for testing the technologies produced by the Technical Category A and Technical Category B teams. For Technical Category A performers teams, the goal of the testing is to measure the chip-to-primary-coolant thermal resistance as well as the complete power cooling power usage as a fraction of IT load. Power capability to the server rack will likely be in the range of 150 to 200 kW, and the heat rejection capability should be in the same range. Ideally multiple systems could be tested in parallel, which would increase power and heat rejection capability needs. Depending on the Technical Category A technology details, support for and measurement of a coolant distribution unit or other coolant managing devices may be required. The power consumed by coolant distribution units, pumps, and other ancillary equipment shall also be measured.

It is ARPA-E's intention that teams in Technical Category A and Technical Category B instrument their proposed innovative solutions and provide connections for necessary power, instrumentation, facility coolant (Technical Category A only) and other connections to a standardized facility interface developed by the Technical Category D team.

It is the intent that such an external standardized interface helps to minimize or eliminate the need for proprietary information sharing between teams that test at the Technical Category D facility. An appropriate legal agreement between the Category D awardee(s) and any Category A or B awardee(s) with whom they are working will be required. These agreements must require maintaining strict confidentiality regarding the technical details of the information that Category A or B awardees provide to Category D awardee(s), and, to the fullest extent allowable by statute and regulation, the results that are generated by the Category D awardee(s) that are identifiable with a particular Category A or B awardee. The agreements must also specify that the Category D awardee(s) will not obtain data rights or other intellectual property rights in any Category A or B awardees' technology that is provided to the Category D awardee(s). Data to be generated by Category D awardee(s) that is identifiable with an individual Category A or B awardees' technology will only be provided to the specific Category A or B awardees whose technology is being evaluated and to ARPA-E.

It is expected that Technical Category A and Technical Category B teams operate the tests themselves with support from the Technical Category D facility team. Teams in Technical Category D should have existing facilities and a track record, and extensive experience in testing servers, racks, and other compute systems.

Teams can submit Technical Category D proposals for facilities that will focus on Technical Category A or Technical Category B separately (please indicate this on a proposal by marking D-A or D-B). Ideally, Technical Category D facilities have sufficient space, staff, power, and heat rejection capability to run multiple Technical Category A and Technical Category B prototypes in parallel.

It is envisioned that proposals for Technical Category D include a number of phases:

- Development of standardized testing interface panels for power, thermocouples, and other interface connections based on communication with the teams
- Facility preparation and development of best-in class testing procedures and protocols
- Facilitation and management of on-site testing and hosting of Technical Category A and Technical Category B teams at the developed facility

Preliminary Reliability screening of Technical Category A systems, subsystems, or components may also be required. Although long duration component reliability testing is considered out of scope of initial awards under this FOA, Technical Category D facilities should be able to run operational tests up to a 1000-hour duration.

Technical Category B will produce scaled or full-size modular data centers of 100 kW to beyond 1 MW IT load that are to operate in any US climate environment. Testing will require measurement of the power used by the cooling system as a fraction of IT load. Internal temperature and power monitoring of the chips will be required. The modular EDGE data center units will require simulated environment or outside testing in an environment closely

resembling ASHRAE climate zone 1A and experience hot conditions as described by **Table 2** for significant parts of the year. These tests will aid Technical Category B teams to validate their models and project performance at corner points of the ASHRAE climate zone 1.

Technical Category A and B teams may use these facilities and capabilities developed in Technical Category D or use internal facilities, as long as it can be demonstrated to ARPA-E that these internal facilities have similar or equal capability as the facilities developed in Technical Category D.

Table 7: Technical Category D Requirements

Team Requirements	• Track record in testing and evaluating data center equipment • Expertise in energy consumption testing and measurement of data center equipment and cooling equipment • Expertise in reliability testing of data center equipment and cooling equipment

Facility requirements	• Technical category D-A:
	  ○ Provide power to the servers at a minimum of 200 kW
	  ○ Heat rejection capability at a minimum of 200 kW at heat rejection temperatures that can be set from 40°C up to 80°C in increments
	  ○ Team shall measure the cooling power consumption of Technical Category A performers teams as a fraction of IT load
	  ○ 4" diameter primary cooling loop supply connections.
	• Technical category D-B:
	  ○ Capability of powering and testing of standalone modular EDGE data center units up to 1.5 MW
	  ○ Measurement of the power used by the cooling system as a fraction of the IT load
	  ○ Internal measurements of power and temperatures through a standardized interface
	  ○ Environmental testing of Technical Category B technologies may include simulated environments as well as outdoor testing
	  ○ Reliability testing shall be performed for both Technical Category A and Technical Category B technologies up to 1000 hours
	  ○ Available space to test between 5 to 10 ISO 40 footprint modular data centers

Test Objectives	• Team will be responsible for developing testing development plans, standardizing the protocols, interfaces, and facilities for testing the technologies produced by the Technical Category A and Technical Category B teams
Support	• Team will support Technical Category A and Technical Category B teams • Team will work with performers to advise on testing of Technical Category A and Technical Category B technologies

3. PROGRAM STRUCTURE AND DELIVERABLES

COOLERCHIPS is a 36-month program offered in a single phase.

Awards will include a specific Go/No-Go milestone approximately halfway through the project to evaluate the overall progress made in de-risking during the first period with an assessment presented of the potential for success of evaluating the technology at scale during the remaining project term.

II. AWARD INFORMATION

A. AWARD OVERVIEW

ARPA-E expects to make approximately $42 million available for new awards under this FOA, subject to the availability of appropriated funds. ARPA-E anticipates making approximately 15-20 awards under this FOA. ARPA-E may, at its discretion, issue one, multiple, or no awards.

Individual awards may vary between $500,000 and $10 million in Federal share.

The period of performance for funding agreements may not exceed 36 months. However, applicants are required to propose an appropriate Go/No-Go milestone at the middle of period of performance. ARPA-E expects to issue funding agreements in July 2023, or as negotiated.

ARPA-E encourages submissions stemming from ideas that still require proof-of-concept R&D efforts as well as those for which some proof-of-concept demonstration already exists.

Submissions requiring proof-of-concept R&D can propose a project with the goal of delivering on the program metric at the conclusion of the period of performance. These submissions must contain an appropriate cost and project duration plan that is described in sufficient technical detail to allow reviewers to meaningfully evaluate the proposed project. Alternatively, submissions requiring proof-of-concept R&D can propose a project with the project end deliverable being an extremely creative, but partial solution. However, the Applicants are required to provide a convincing vision how these partial solutions can enable the realization of the program metrics with further development.

Applicants proposing projects for which some initial proof-of-concept demonstration already exists should submit concrete data that supports the probability of success of the proposed project.

ARPA-E will provide support at the highest funding level only for submissions with significant technology risk, aggressive timetables, and careful management and mitigation of the associated risks.

ARPA-E will accept only new submissions under this FOA. Applicants may not seek renewal or supplementation of their existing awards through this FOA.

ARPA-E plans to fully fund negotiated budgets at the time of award.

B. RENEWAL AWARDS

At ARPA-E's sole discretion, awards resulting from this FOA may be renewed by making a new award, adding one or more budget periods and/or extending the period of performance of the

initial award. Renewal funding is contingent on: (1) availability of funds appropriated by Congress for the purpose of this program; (2) substantial progress towards meeting the objectives of the approved application; (3) submittal of required reports; (4) compliance with the terms and conditions of the award; (5) ARPA-E approval of a renewal application; and (6) other factors identified by the Agency at the time it solicits a renewal application.

C. ARPA-E FUNDING AGREEMENTS

Through cooperative agreements, other transactions, and similar agreements, ARPA-E provides financial and other support to projects that have the potential to realize ARPA-E's statutory mission. ARPA-E does not use such agreements to acquire property or services for the direct benefit or use of the U.S. Government.

Congress directed ARPA-E to "establish and monitor project milestones, initiate research projects quickly, and just as quickly terminate or restructure projects if such milestones are not achieved."[50] Accordingly, ARPA-E has substantial involvement in the direction of every Cooperative Agreement, as described in Section II.D below.

1. COOPERATIVE AGREEMENTS

ARPA-E generally uses Cooperative Agreements to provide financial and other support to Prime Recipients.[51]

Cooperative Agreements involve the provision of financial or other support to accomplish a public purpose of support or stimulation authorized by Federal statute. Under Cooperative Agreements, the Government and Prime Recipients share responsibility for the direction of projects.

ARPA-E encourages Prime Recipients to review the Model Cooperative Agreement, which is available at https://arpa-e.energy.gov/technologies/project-guidance.

2. FUNDING AGREEMENTS WITH FFRDCS/DOE LABS, GOGOS, AND FEDERAL INSTRUMENTALITIES

Any Federally Funded Research and Development Centers (FFRDC) involved as a member of a Project Team must provide the information requested in the "FFRDC Lab Authorization" and "Field Work Proposal" section of the Business Assurances & Disclosures Form, which is submitted with the Applicant's Full Application.

When a FFRDC/DOE Lab (including the National Energy Technology Laboratory or NETL) is the

[50] U.S. Congress, Conference Report to accompany the 21st Century Competitiveness Act of 2007, H. Rpt. 110-289 at 171-172 (Aug. 1, 2007).
[51] The Prime Recipient is the signatory to the funding agreement with ARPA-E.

lead organization for a Project Team, ARPA-E executes a funding agreement directly with the FFRDC/DOE Lab and a single, separate Cooperative Agreement with another entity on the Project Team. Notwithstanding the use of multiple agreements, the FFRDC/DOE Lab is the lead organization for the entire project, including all work performed by the FFRDC/DOE Lab and the rest of the Project Team.

When a FFRDC/DOE Lab is a *member* of a Project Team, ARPA-E executes a funding agreement directly with the FFRDC/DOE Lab and a single, separate Cooperative Agreement with the Prime Recipient, as the lead organization for the Project Team. Notwithstanding the use of multiple agreements, the Prime Recipient under the Cooperative Agreement is the lead organization for the entire project, including all work performed by the FFRDC/DOE Lab and the rest of the Project Team.

Funding agreements with DOE/NNSA FFRDCs take the form of Work Authorizations issued to DOE/NNSA FFRDCs through the DOE/NNSA Field Work Proposal system for work performed under Department of Energy Management & Operation Contracts. Funding agreements with non-DOE/NNSA FFRDCs, GOGOs (including NETL), and Federal instrumentalities (e.g., Tennessee Valley Authority) will be consistent with the sponsoring agreement between the U.S. Government and the Laboratory. Any funding agreement with an FFRDC or GOGO will have similar terms and conditions as ARPA-E's Model Cooperative Agreement (https://arpa-e.energy.gov/technologies/project-guidance/pre-award-guidance/funding-agreements).

Non-DOE GOGOs and Federal agencies may be proposed to provide support to the Project Team members on an applicant's project, through a Cooperative Research and Development Agreement (CRADA) or similar agreement.

3. OTHER TRANSACTIONS AUTHORITY

ARPA-E may use its "other transactions" authority under the America COMPETES Reauthorization Act of 2010, and DOE's other transactions authority as codified at 42 USC § 7256, to enter into an other transaction agreement with Prime Recipients, on a case-by-case basis.

ARPA-E may negotiate an other transaction agreement when it determines that the use of a standard cooperative agreement, grant, or contract is not feasible or appropriate for a project.

In general, an other transaction agreement normally requires a minimum cost share of 50%. See Section III.B.2 of the FOA.

D. STATEMENT OF SUBSTANTIAL INVOLVEMENT

ARPA-E is substantially involved in the direction of projects from inception to completion. For the purposes of an ARPA-E project, substantial involvement means:

- Project Teams must adhere to ARPA-E's agency-specific and programmatic requirements.
- ARPA-E may intervene at any time in the conduct or performance of work under an award.
- ARPA-E does not limit its involvement to the administrative requirements of an award. Instead, ARPA-E has substantial involvement in the direction and redirection of the technical aspects of the project as a whole.
- ARPA-E may, at its sole discretion, modify or terminate projects that fail to achieve predetermined Go/No Go decision points or technical milestones and deliverables.
- During award negotiations, ARPA-E Program Directors and Prime Recipients mutually establish an aggressive schedule of quantitative milestones and deliverables that must be met every quarter. In addition, ARPA-E will negotiate and establish "Go/No-Go" milestones for each project. If the Prime Recipient fails to achieve any of the "Go/No-Go" milestones or technical milestones and deliverables as determined by the ARPA-E Contracting Officer, ARPA-E may – at its discretion - renegotiate the statement of project objectives or schedule of technical milestones and deliverables for the project. In the alternative, ARPA-E may suspend or terminate the award in accordance with 2 C.F.R. §§ 200.339 – 200.343.
- ARPA-E may provide guidance and/or assistance to the Prime Recipient to accelerate the commercial deployment of ARPA-E-funded technologies. Guidance and assistance provided by ARPA-E may include coordination with other Government agencies and nonprofits[52] to provide mentoring and networking opportunities for Prime Recipients. ARPA-E may also organize and sponsor events to educate Prime Recipients about key barriers to the deployment of their ARPA-E-funded technologies. In addition, ARPA-E may establish collaborations with private and public entities to provide continued support for the development and deployment of ARPA-E-funded technologies.

[52] The term "nonprofit organization" or "nonprofit" is defined in Section IX.

III. ELIGIBILITY INFORMATION

A. ELIGIBLE APPLICANTS

This FOA is open to U.S. universities, national laboratories, industry and individuals.

1. INDIVIDUALS

U.S. citizens or permanent residents may apply for funding in their individual capacity as a Standalone Applicant,[53] as the lead for a Project Team,[54] or as a member of a Project Team. However, ARPA-E will only award funding to an entity formed by the Applicant.

2. DOMESTIC ENTITIES

For-profit entities[55], educational institutions[56], and nonprofits[57] that are incorporated in the United States, including U.S. territories, are eligible to apply for funding as a Standalone Applicant, as the lead organization for a Project Team, or as a member of a Project Team.

FFRDCs/DOE Labs are eligible to apply for funding as the lead organization for a Project Team or as a member of a Project Team that includes institutions of higher education, companies, research foundations, or trade and industry research collaborations, but not as a Standalone Applicant.

State, local, and tribal government entities are eligible to apply for funding as a member of a Project Team, but not as a Standalone Applicant or as the lead organization for a Project Team.

Federal agencies and instrumentalities (other than DOE) are eligible to apply for funding as a member of a Project Team, but not as a Standalone Applicant or as the lead organization for a Project Team.

3. FOREIGN ENTITIES

Foreign entities, whether for-profit or otherwise, are eligible to apply for funding as Standalone Applicants, as the lead organization for a Project Team, or as a member of a Project Team.

---

[53] A Standalone Applicant is an Applicant that applies for funding on its own, not as part of a Project Team.
[54] A Project Team consists of the Prime Recipient, Subrecipients, and others performing or otherwise supporting work under an ARPA-E funding agreement.
[55] For-Profit Organizations (Other than Small Businesses) (or *large businesses*): Means entities organized for-profit other than small businesses as defined elsewhere in this Glossary.
[56] Institutions of Higher Education (or educational institutions): Has the meaning set forth at 20 U.S.C. 1001.
[57] Nonprofit organizations described in section 501(c)(4) of the Internal Revenue Code of 1986 that engaged in lobbying activities after December 31, 1995 are not eligible to apply for funding as a Prime Recipient or Subrecipient.

Foreign entities must designate in the Full Application a subsidiary or affiliate incorporated (or otherwise formed or to be formed) under the laws of a State or territory of the United States to receive funding. The Full Application must state the nature of the corporate relationship between the foreign entity and domestic subsidiary or affiliate. All work under the ARPA-E award must be performed in the United States. The Applicant may request a waiver of this requirement in the Business Assurances & Disclosures Form, which is submitted with the Full Application and can be found at https://arpa-e-foa.energy.gov/ (see "View Template Application Documents"). Refer to the Business Assurances & Disclosures Form for guidance on the content and form of the request.

4. CONSORTIUM ENTITIES

Consortia, which may include domestic and foreign entities, must designate one member of the consortium as the consortium representative to the Project Team. The consortium representative must be incorporated in the United States. The eligibility of the consortium will be determined by reference to the eligibility of the consortium representative under Section III.A of the FOA. Each consortium must have an internal governance structure and a written set of internal rules. Upon request, the consortium entity must provide a written description of its internal governance structure and its internal rules to the Contracting Officer (ARPA-E-CO@hq.doe.gov).

Unincorporated consortia must provide the Contracting Officer with a collaboration agreement, commonly referred to as the articles of collaboration, which sets out the rights and responsibilities of each consortium member. This collaboration agreement binds the individual consortium members together and shall include the consortium's:

- Management structure;
- Method of making payments to consortium members;
- Means of ensuring and overseeing members' efforts on the project;
- Provisions for members' cost sharing contributions; and
- Provisions for ownership and rights in intellectual property developed previously or under the agreement.

B. COST SHARING[58]

Applicants are bound by the cost share proposed in their Full Applications.

1. BASE COST SHARE REQUIREMENT

ARPA-E generally uses Cooperative Agreements to provide financial and other support to Prime Recipients (see Section II.C.1 of the FOA). Under a Cooperative Agreement or Grant, the Prime

[58] Please refer to Section VI.B.3-4 of the FOA for guidance on cost share payments and reporting.

Recipient must provide at least 20% of the Total Project Cost[59] as cost share, except as provided in Sections III.B2 or III.B.3 below.[60]

2. INCREASED COST SHARE REQUIREMENT

Large businesses[61] are strongly encouraged to provide more than 20% of the Total Project Cost as cost share. ARPA-E may consider the amount of cost share proposed when selecting applications for award negotiations (see Section V.B.1 of the FOA).

Under an "other transaction" agreement, the Prime Recipient is normally expected to provide at least 50% of the Total Project Cost as cost share. ARPA-E may reduce this cost share requirement, as appropriate.

3. REDUCED COST SHARE REQUIREMENT

ARPA-E has reduced the base cost share requirement for the following types of projects:

- A domestic educational institution or domestic nonprofit applying as a Standalone Applicant is required to provide at least 5% of the Total Project Cost as cost share.

- Project Teams composed exclusively of domestic educational institutions, domestic nonprofits, and/or FFRDCs/DOE Labs/Federal agencies and instrumentalities (other than DOE) are required to provide at least 5% of the Total Project Cost as cost share.

- Small businesses – or consortia of small businesses – may provide 0% cost share from the outset of the project through the first 12 months of the project (hereinafter the "Cost Share Grace Period").[62] If the project is continued beyond the Cost Share Grace Period, then at least 10% of the Total Project Cost (including the costs incurred during the Cost Share Grace Period) will be required as cost share over the remaining period of performance.

- Project Teams where a small business is the lead organization and small businesses perform greater than or equal to 80% of the total work under the funding agreement (as measured by the Total Project Cost) are entitled to the same cost share reduction and Cost Share Grace Period as provided above to Standalone small businesses or consortia of small businesses.

---

[59] The Total Project Cost is the sum of the Prime Recipient share and the Federal Government share of total allowable costs. The Federal Government share generally includes costs incurred by GOGOs and FFRDCs.
[60] Energy Policy Act of 2005, Pub.L. 109-58, sec. 988(c)
[61] The term "For-Profit Organizations (Other than Small Businesses)" or "large business" is defined in Section IX.
[62] The term "small business" is defined in Section IX.

- Project Teams where domestic educational institutions, domestic nonprofits, small businesses, and/or FFRDCs perform greater than or equal to 80% of the total work under the funding agreement (as measured by the Total Project Cost) are required to provide at least 10% of the Total Project Cost as cost share. However, any entity (such as a large business) receiving patent rights under a class waiver, or other patent waiver, that is part of a Project Team receiving this reduction must continue to meet the statutory minimum cost share requirement (20%) for its portion of the Total Project Cost.

- Projects that do not meet any of the above criteria are subject to the base cost share requirements described in Sections III.B.1 and III.B.2 of the FOA.

4. LEGAL RESPONSIBILITY

Although the cost share requirement applies to the Project Team as a whole, the funding agreement makes the Prime Recipient legally responsible for paying, or ensuring payment of, the entire cost share. The Prime Recipient's cost share obligation is expressed in the funding agreement as a static amount in U.S. dollars (cost share amount) and as a percentage of the Total Project Cost (cost share percentage). If the funding agreement is terminated prior to the end of the period of performance, the Prime Recipient is required to contribute at least the cost share percentage of total expenditures incurred through the date of termination.

The Prime Recipient is solely responsible for managing cost share contributions by the Project Team and enforcing cost share obligations assumed by Project Team members in subawards or related agreements.

5. COST SHARE ALLOCATION

Each Project Team is free to determine how much each Project Team member will contribute towards the cost share requirement. The amount contributed by individual Project Team members may vary, as long as the cost share requirement for the project as a whole is met.

6. COST SHARE TYPES AND ALLOWABILITY

Every cost share contribution must be allowable under the applicable Federal cost principles, as described in Section IV.G of the FOA.

Project Teams may provide cost share in the form of cash or in-kind contributions. Cash contributions may be provided by the Prime Recipient or Subrecipients. Allowable in-kind contributions include but are not limited to personnel costs, indirect costs, facilities and administrative costs, rental value of buildings or equipment, and the value of a service, other resource, or third-party in-kind contribution. Project Teams may use funding or property received from state or local governments to meet the cost share requirement, so long as the

funding or property was not provided to the state or local government by the Federal Government.

The Prime Recipient may not use the following sources to meet its cost share obligations:

- Revenues or royalties from the prospective operation of an activity beyond the period of performance;
- Proceeds from the prospective sale of an asset of an activity;
- Appropriated Federal funding or property (e.g., Federal grants, equipment owned by the Federal Government); or
- Expenditures that were reimbursed under a separate Federal program.

In addition, Project Teams may not use independent research and development (IR&D) funds[63] to meet their cost share obligations under Cooperative Agreements. However, Project Teams may use IR&D funds to meet their cost share obligations under "other transaction" agreements.

Project Teams may not use the same cash or in-kind contributions to meet cost share requirements for more than one project or program.

Cost share contributions must be specified in the project budget, verifiable from the Prime Recipient's records, and necessary and reasonable for proper and efficient accomplishment of the project. Every cost share contribution must be reviewed and approved in advance by the Contracting Officer and incorporated into the project budget before the expenditures are incurred.

Applicants may wish to refer to 2 C.F.R. Parts 200 and 910, and 10 C.F.R Part 603 for additional guidance on cost sharing, specifically 2 C.F.R. §§ 200.306 and 910.130, and 10 C.F.R. §§ 603.525-555.

7. COST SHARE CONTRIBUTIONS BY FFRDCS AND GOGOS

Because FFRDCs are funded by the Federal Government, costs incurred by FFRDCs generally may not be used to meet the cost share requirement. FFRDCs may contribute cost share only if the contributions are paid directly from the contractor's Management Fee or a non-Federal source.

Because GOGOs/Federal Agencies are funded by the Federal Government, GOGOs/Federal Agencies may not provide cost share for the proposed project. However, the GOGO/Agency costs would be included in Total Project Costs for purposes of calculating the cost-sharing requirements of the applicant.

[63] As defined in Federal Acquisition Regulation SubSection 31.205-18.

8. COST SHARE VERIFICATION

Upon selection for award negotiations, Applicants are required to provide information and documentation regarding their cost share contributions. Please refer to Section VI.B.3 of the FOA for guidance on the requisite cost share information and documentation.

C. OTHER

1. COMPLIANT CRITERIA

Concept Papers are deemed compliant if:

- The Applicant meets the eligibility requirements in Section III.A of the FOA;
- The Concept Paper complies with the content and form requirements in Section IV.C of the FOA; and
- The Applicant entered all required information, successfully uploaded all required documents, and clicked the "Submit" button in ARPA-E eXCHANGE by the deadline stated in the FOA.

Concept Papers found to be noncompliant may not be merit reviewed or considered for award. ARPA-E may not review or consider noncompliant Concept Papers, including Concept Papers submitted through other means, Concept Papers submitted after the applicable deadline, and incomplete Concept Papers. A Concept Paper is incomplete if it does not include required information. ARPA-E will not extend the submission deadline for Applicants that fail to submit required information and documents due to server/connection congestion.

Full Applications are deemed compliant if:

- The Applicant submitted a compliant and responsive Concept Paper;
- The Applicant meets the eligibility requirements in Section III.A of the FOA;
- The Full Application complies with the content and form requirements in Section IV.D of the FOA; and
- The Applicant entered all required information, successfully uploaded all required documents, and clicked the "Submit" button in ARPA-E eXCHANGE by the deadline stated in the FOA.

Full Applications found to be noncompliant may not be merit reviewed or considered for award. ARPA-E may not review or consider noncompliant Full Applications, including Full Applications submitted through other means, Full Applications submitted after the applicable deadline, and incomplete Full Applications. A Full Application is incomplete if it does not include required information and documents, such as Forms SF-424 and SF-424A. ARPA-E will not extend the submission deadline for Applicants that fail to submit required information and documents due to server/connection congestion.

Replies to Reviewer Comments are deemed compliant if:

- The Applicant successfully uploads its response to ARPA-E eXCHANGE by the deadline stated in the FOA; and
- The Replies to Reviewer Comments comply with the content and form requirements of Section IV.E of the FOA.

ARPA-E will not review or consider noncompliant Replies to Reviewer Comments, including Replies submitted through other means and Replies submitted after the applicable deadline. ARPA-E will not extend the submission deadline for Applicants that fail to submit required information due to server/connection congestion. ARPA-E will review and consider each compliant and responsive Full Application, even if no Reply is submitted or if the Reply is found to be noncompliant.

2. RESPONSIVENESS CRITERIA

ARPA-E performs a preliminary technical review of Concept Papers and Full Applications. The following types of submissions may be deemed nonresponsive and may not be reviewed or considered:

- Submissions that fall outside the technical parameters specified in this FOA.
- Submissions that have been submitted in response to currently issued ARPA-E FOAs.
- Submissions that are not scientifically distinct from applications submitted in response to currently issued ARPA-E FOAs.
- Submissions for basic research aimed solely at discovery and/or fundamental knowledge generation.
- Submissions for large-scale demonstration projects of existing technologies.
- Submissions for proposed technologies that represent incremental improvements to existing technologies.
- Submissions for proposed technologies that are not based on sound scientific principles (e.g., violates a law of thermodynamics).
- Submissions for proposed technologies that are not transformational, as described in Section I.A of the FOA.
- Submissions for proposed technologies that do not have the potential to become disruptive in nature, as described in Section I.A of the FOA. Technologies must be scalable such that they could be disruptive with sufficient technical progress.
- Submissions that are not distinct in scientific approach or objective from activities currently supported by or actively under consideration for funding by any other office within Department of Energy.
- Submissions that are not distinct in scientific approach or objective from activities currently supported by or actively under consideration for funding by other government agencies or the private sector.

- Submissions that do not propose a R&D plan that allows ARPA-E to evaluate the submission under the applicable merit review criteria provided in Section V.A of the FOA.
- Solutions that exclusively focus on embedded carbon footprint of the data center facility rather than operational carbon footprint.

3. SUBMISSIONS SPECIFICALLY NOT OF INTEREST

Submissions that propose the following will be deemed nonresponsive and will not be merit reviewed or considered:

- Applications for proposed technologies that are not based on sound scientific principles (e.g. violates a law of thermodynamics).
- Applications for basic research aimed solely at discovery and/or fundamental knowledge generation.
- Paper studies alone.
- Software or model development alone (Technical Categories A, B, and D).
- Innovations that focus only on a subcomponent of the cooling system (i.e. heat sink) without integration into the targeted system or sub-system(s).
- Solutions involving chip design, power electronics improvements, and software architecture.
- Solutions that exclusively focus on embedded carbon footprint of the data center facility rather than operational carbon footprint.
- Solutions that focus solely on cooling systems not intended for servers or compute elements.
- Applications that fall outside the technical parameters specified in Section I.D of the FOA.
- Applications for large-scale demonstration projects of existing technologies.
- Applications for proposed technologies that represent incremental improvements to existing technologies.
- Applications for proposed technologies that are not transformational, as described in Section I.A of the FOA.
- Applications for proposed technologies that do not have the potential to become disruptive in nature, as described in Section I.A of the FOA. Technologies must be scalable such that they could be disruptive with sufficient technical progress.
- Applications that are not scientifically distinct from applications submitted in response to other currently issued ARPA-E FOAs.
- Applications that are not scientifically distinct from existing funded activities supported elsewhere, including within the Department of Energy.

4. LIMITATION ON NUMBER OF SUBMISSIONS

ARPA-E is not limiting the number of submissions from Applicants. Applicants may submit more than one application to this FOA.

Small business Applicants that qualify as a "Small Business Concern"[64] may apply to only one of the two ARPA-E COOLERCHIPS FOAs: DE-FOA-0002852 (COOLERCHIPS SBIR/STTR), or DE-FOA-0002851 (COOLERCHIPS). Small businesses that qualify as "Small Business Concerns" are strongly encouraged to apply under the former (SBIR/STTR FOA). To determine eligibility as a "Small Business Concern" under DE-FOA-0002852 (SBIR/STTR), please review the eligibility requirements in Sections III.A – III.D of that FOA.

[64] Please refer to the U.S. Small Business Administration (SBA) website. A Small Business Concern is a for-profit entity that: (1) maintains a place of business located in the United States; (2) operates primarily within the United States or makes a significant contribution to the United States economy through payment of taxes or use of American products, materials or labor; (3) is an individual proprietorship, partnership, corporation, limited liability company, joint venture, association, trust, or cooperative; and (4) meets the size eligibility requirements set forth in 13 C.F.R. § 121.702. Where the entity is formed as a joint venture, there can be no more than 49% participation by foreign business entities in the joint venture.

IV. APPLICATION AND SUBMISSION INFORMATION

A. APPLICATION PROCESS OVERVIEW

1. REGISTRATION IN ARPA-E eXCHANGE

The first step in applying to this FOA is registration in ARPA-E eXCHANGE, ARPA-E's online application portal. For detailed guidance on using ARPA-E eXCHANGE, please refer to Section IV.H.1 of the FOA and the "ARPA-E eXCHANGE User Guide" (https://arpa-e-foa.energy.gov/Manuals.aspx).

2. CONCEPT PAPERS

Applicants must submit a Concept Paper by the deadline stated in the FOA. Section IV.C of the FOA provides instructions on submitting a Concept Paper.

ARPA-E performs a preliminary review of Concept Papers to determine whether they are compliant and responsive, as described in Section III.C of the FOA. Concept Papers found to be noncompliant or nonresponsive may not be merit reviewed or considered for award. ARPA-E makes an independent assessment of each compliant and responsive Concept Paper based on the criteria and program policy factors in Sections V.A.1 and V.B.1 of the FOA.

ARPA-E will encourage a subset of Applicants to submit Full Applications. Other Applicants will be discouraged from submitting a Full Application in order to save them the time and expense of preparing an application submission that is unlikely to be selected for award negotiations. By discouraging the submission of a Full Application, ARPA-E intends to convey its lack of programmatic interest in the proposed project. Such assessments do not necessarily reflect judgments on the merits of the proposed project. Unsuccessful Applicants should continue to submit innovative ideas and concepts to future FOAs.

3. FULL APPLICATIONS

Applicants must submit a Full Application by the deadline stated in the FOA. Applicants will have approximately 45 days from receipt of the Encourage/Discourage notification to prepare and submit a Full Application. Section IV.D of the FOA provides instructions on submitting a Full Application.

ARPA-E performs a preliminary review of Full Applications to determine whether they are compliant and responsive, as described in Section III.C of the FOA. Full Applications found to be noncompliant or nonresponsive may not be merit reviewed or considered for award. ARPA-E makes an independent assessment of each compliant and responsive Full Application based on the criteria and program policy factors in Sections V.A.2 and V.B.1 of the FOA.

4. REPLY TO REVIEWER COMMENTS

Once ARPA-E has completed its review of Full Applications, reviewer comments on compliant and responsive Full Applications are made available to Applicants via ARPA-E eXCHANGE. Applicants may submit an optional Reply to Reviewer Comments, which must be submitted by the deadline stated in the FOA. Section IV.E of the FOA provides instructions on submitting a Reply to Reviewer Comments.

ARPA-E performs a preliminary review of Replies to determine whether they are compliant, as described in Section III.C.1 of the FOA. ARPA-E will review and consider compliant Replies only. ARPA-E will review and consider each compliant and responsive Full Application, even if no Reply is submitted or if the Reply is found to be non-compliant.

5. PRE-SELECTION CLARIFICATIONS AND "DOWN-SELECT" PROCESS

Once ARPA-E completes its review of Full Applications and Replies to Reviewer Comments, it may, at the Contracting Officer's discretion, conduct a pre-selection clarification process and/or perform a "down-select" of Full Applications. Through the pre-selection clarification process or down-select process, ARPA-E may obtain additional information from select Applicants through pre-selection meetings, webinars, videoconferences, conference calls, written correspondence, or site visits that can be used to make a final selection determination. ARPA-E will not reimburse Applicants for travel and other expenses relating to pre-selection meetings or site visits, nor will these costs be eligible for reimbursement as pre-award costs.

ARPA-E may select applications for award negotiations and make awards without pre-selection meetings and site visits. Participation in a pre-selection meeting or site visit with ARPA-E does not signify that Applicants have been selected for award negotiations.

6. SELECTION FOR AWARD NEGOTIATIONS

ARPA-E carefully considers all of the information obtained through the application process and makes an independent assessment of each compliant and responsive Full Application based on the criteria and program policy factors in Sections V.A.2 and V.B.1 of the FOA. The Selection Official may select all or part of a Full Application for award negotiations. The Selection Official may also postpone a final selection determination on one or more Full Applications until a later date, subject to availability of funds and other factors. ARPA-E will enter into award negotiations only with selected Applicants.

Applicants are promptly notified of ARPA-E's selection determination. ARPA-E may stagger its selection determinations. As a result, some Applicants may receive their notification letter in advance of other Applicants. Please refer to Section VI.A of the FOA for guidance on award notifications.

B. APPLICATION FORMS

Required forms for Full Applications are available on ARPA-E eXCHANGE (https://arpa-e-foa.energy.gov), including the SF-424 and Budget Justification Workbook/SF-424A. A sample Summary Slide is available on ARPA-E eXCHANGE. Applicants may use the templates available on ARPA-E eXCHANGE, including the template for the Concept Paper, the template for the Technical Volume of the Full Application, the template for the Summary Slide, the template for the Summary for Public Release, the template for the Reply to Reviewer Comments, and the template for the Business Assurances & Disclosures Form. A sample response to the Business Assurances & Disclosures Form is available on ARPA-E eXCHANGE.

C. CONTENT AND FORM OF CONCEPT PAPERS

The Concept Paper is mandatory (i.e. in order to submit a Full Application, a compliant and responsive Concept Paper must have been submitted) and must conform to the following formatting requirements:

- The Concept Paper must not exceed 4 pages in length including graphics, figures, and/or tables.
- The Concept Paper must be submitted in Adobe PDF format.
- The Concept Paper must be written in English.
- All pages must be formatted to fit on 8-1/2 by 11 inch paper with margins not less than one inch on every side. Single space all text and use Times New Roman typeface, a black font color, and a font size of 12 point or larger (except in figures and tables).
- The ARPA-E assigned Control Number, the Lead Organization Name, and the Principal Investigator's Last Name must be prominently displayed on the upper right corner of the header of every page. Page numbers must be included in the footer of every page.
- The first paragraph must include the Lead Organization's Name and Location, Principal Investigator's Name, Technical Category, Proposed Funding Requested (Federal and Cost Share), and Project Duration.

Concept Papers found to be noncompliant or nonresponsive may not be merit reviewed or considered for award (see Section III.C of the FOA).

Each Concept Paper must be limited to a single concept or technology. Unrelated concepts and technologies must not be consolidated into a single Concept Paper.

A fillable Concept Paper template is available on ARPA-E eXCHANGE at https://arpa-e-foa.energy.gov.

Concept Papers must conform to the content requirements described below. If Applicants exceed the maximum page length indicated above, ARPA-E will review only the authorized number of pages and disregard any additional pages.

1. CONCEPT PAPER

a. CONCEPT SUMMARY

- Describe the proposed concept with minimal jargon, and explain how it addresses the Program Objectives of the FOA.

b. INNOVATION AND IMPACT

- Clearly identify the problem to be solved with the proposed technology concept.
- Describe how the proposed effort represents an innovative and potentially transformational solution to the technical challenges posed by the FOA.
- Explain the concept's potential to be disruptive compared to existing or emerging technologies.
- To the extent possible, provide quantitative metrics in a table that compares the proposed technology concept to current and emerging technologies and to the Technical Performance Targets in Section I.D of the FOA for the appropriate Technology Category in Section I.D of the FOA.

c. PROPOSED WORK

- Describe the final deliverable(s) for the project and the overall technical approach used to achieve project objectives.
- Discuss alternative approaches considered, if any, and why the proposed approach is most appropriate for the project objectives.
- Describe the background, theory, simulation, modeling, experimental data, or other sound engineering and scientific practices or principles that support the proposed approach. Provide specific examples of supporting data and/or appropriate citations to the scientific and technical literature.
- Describe why the proposed effort is a significant technical challenge and the key technical risks to the project. Does the approach require one or more entirely new technical developments to succeed? How will technical risk be mitigated?
- Identify techno-economic challenges to be overcome for the proposed technology to be commercially relevant.
- Estimated federal funds requested; total project cost including cost sharing.

d. TEAM ORGANIZATION AND CAPABILITIES

- Indicate the roles and responsibilities of the organizations and key personnel that comprise the Project Team.
- Provide the name, position, and institution of each key team member and describe in 1-2 sentences the skills and experience that he/she brings to the team.
- Identify key capabilities provided by the organizations comprising the Project Team and how those key capabilities will be used in the proposed effort.
- Identify (if applicable) previous collaborative efforts among team members relevant to the proposed effort.

D. CONTENT AND FORM OF FULL APPLICATIONS

[TO BE INSERTED BY FOA MODIFICATION IN DECEMBER 2022]

E. CONTENT AND FORM OF REPLIES TO REVIEWER COMMENTS

[TO BE INSERTED BY FOA MODIFICATION IN DECEMBER 2022]

F. INTERGOVERNMENTAL REVIEW

This program is not subject to Executive Order 12372 (Intergovernmental Review of Federal Programs).

G. FUNDING RESTRICTIONS

[TO BE INSERTED BY FOA MODIFICATION IN DECEMBER 2022]

H. OTHER SUBMISSION REQUIREMENTS

1. USE OF ARPA-E eXCHANGE

To apply to this FOA, Applicants must register with ARPA-E eXCHANGE (https://arpa-e-foa.energy.gov/Registration.aspx). Concept Papers, Full Applications, and Replies to Reviewer Comments must be submitted through ARPA-E eXCHANGE (https://arpa-e-foa.energy.gov/login.aspx). ARPA-E will not review or consider applications submitted through other means (e.g., fax, hand delivery, email, postal mail). For detailed guidance on using ARPA-E eXCHANGE, please refer to the "ARPA-E eXCHANGE Applicant Guide" (https://arpa-e-foa.energy.gov/Manuals.aspx).

Upon creating an application submission in ARPA-E eXCHANGE, Applicants will be assigned a Control Number. If the Applicant creates more than one application submission, a different Control Number will be assigned for each application.

Once logged in to ARPA-E eXCHANGE (https://arpa-e-foa.energy.gov/login.aspx), Applicants may access their submissions by clicking the "My Submissions" link in the navigation on the left side of the page. Every application that the Applicant has submitted to ARPA-E and the corresponding Control Number is displayed on that page. If the Applicant submits more than one application to a particular FOA, a different Control Number is shown for each application.

Applicants are responsible for meeting each submission deadline in ARPA-E eXCHANGE. **Applicants are strongly encouraged to submit their applications at least 48 hours in advance of the submission deadline.** Under normal conditions (i.e., at least 48 hours in advance of the submission deadline), Applicants should allow at least 1 hour to submit a Concept Paper, or Full Application. In addition, Applicants should allow at least 15 minutes to submit a Reply to Reviewer Comments. Once the application is submitted in ARPA-E eXCHANGE, Applicants may revise or update their application until the expiration of the applicable deadline.

Applicants should not wait until the last minute to begin the submission process. During the final hours before the submission deadline, Applicants may experience server/connection congestion that prevents them from completing the necessary steps in ARPA-E eXCHANGE to submit their applications. **ARPA-E will not extend the submission deadline for Applicants that fail to submit required information and documents due to server/connection congestion.**

ARPA-E may not review or consider incomplete applications and applications received after the deadline stated in the FOA. Such applications may be deemed noncompliant (see Section III.C.1 of the FOA). The following errors could cause an application to be deemed "incomplete" and thus noncompliant:

- Failing to comply with the form and content requirements in Section IV of the FOA;
- Failing to enter required information in ARPA-E eXCHANGE;
- Failing to upload required document(s) to ARPA-E eXCHANGE;
- Failing to click the "Submit" button in ARPA-E eXCHANGE by the deadline stated in the FOA;
- Uploading the wrong document(s) or application(s) to ARPA-E eXCHANGE; and
- Uploading the same document twice, but labeling it as different documents. (In the latter scenario, the Applicant failed to submit a required document.)

ARPA-E urges Applicants to carefully review their applications and to allow sufficient time for the submission of required information and documents.

V. APPLICATION REVIEW INFORMATION

A. CRITERIA

ARPA-E performs a preliminary review of Concept Papers and Full Applications to determine whether they are compliant and responsive (see Section III.C of the FOA). ARPA-E also performs a preliminary review of Replies to Reviewer Comments to determine whether they are compliant.

ARPA-E considers a mix of quantitative and qualitative criteria in determining whether to encourage the submission of a Full Application and whether to select a Full Application for award negotiations.

1. CRITERIA FOR CONCEPT PAPERS

(1) *Impact of the Proposed Technology Relative to FOA Targets* (50%) - This criterion involves consideration of the following:

- The potential for a transformational and disruptive (not incremental) advancement compared to existing or emerging technologies;
- Achievement of the technical performance targets defined in Section I.D of the FOA for the appropriate technology Category in Section I.D of the FOA;
- Identification of techno-economic challenges that must be overcome for the proposed technology to be commercially relevant; and
- Demonstration of awareness of competing commercial and emerging technologies and identifies how the proposed concept/technology provides significant improvement over existing solutions.

(2) *Overall Scientific and Technical Merit* (50%) - This criterion involves consideration of the following:

- The feasibility of the proposed work, as justified by appropriate background, theory, simulation, modeling, experimental data, or other sound scientific and engineering practices;
- Sufficiency of technical approach to accomplish the proposed R&D objectives, including why the proposed concept is more appropriate than alternative approaches and how technical risk will be mitigated;
- Clearly defined project outcomes and final deliverables; and
- The demonstrated capabilities of the individuals performing the project, the key capabilities of the organizations comprising the Project Team, the roles and responsibilities of each organization and (if applicable) previous collaborations among team members supporting the proposed project.

Submissions will not be evaluated against each other since they are not submitted in accordance with a common work statement.

2. CRITERIA FOR FULL APPLICATIONS

[TO BE INSERTED BY FOA MODIFICATION IN DECEMBER 2022]

3. CRITERIA FOR REPLIES TO REVIEWER COMMENTS

[TO BE INSERTED BY FOA MODIFICATION IN DECEMBER 2022]

B. REVIEW AND SELECTION PROCESS

1. PROGRAM POLICY FACTORS

In addition to the above criteria, ARPA-E may consider the following program policy factors in determining which Concept Papers to encourage to submit a Full Application and which Full Applications to select for award negotiations:

I. **ARPA-E Portfolio Balance**. Project balances ARPA-E portfolio in one or more of the following areas:
   a. Diversity of technical personnel in the proposed Project Team;
   b. Technological diversity;
   c. Organizational diversity;
   d. Geographic diversity;
   e. Technical or commercialization risk; or
   f. Stage of technology development.

II. **Relevance to ARPA-E Mission Advancement.** Project contributes to one or more of ARPA-E's key statutory goals:
   a. Reduction of U.S. dependence on foreign energy sources;
   b. Stimulation of U.S. manufacturing and/or software development
   c. Reduction of energy-related emissions;
   d. Increase in U.S. energy efficiency;
   e. Enhancement of U.S. economic and energy security; or
   f. Promotion of U.S. advanced energy technologies competitiveness.

III. **Synergy of Public and Private Efforts**.
   a. Avoids duplication and overlap with other publicly or privately funded projects;
   b. Promotes increased coordination with nongovernmental entities for demonstration of technologies and research applications to facilitate technology transfer; or
   c. Increases unique research collaborations.

IV. **Low likelihood of other sources of funding.** High technical and/or financial uncertainty that results in the non-availability of other public, private or internal funding or resources to support the project.

V. **High-Leveraging of Federal Funds**. Project leverages Federal funds to optimize advancement of programmatic goals by proposing cost share above the required minimum or otherwise accessing scarce or unique resources.

VI. **High Project Impact Relative to Project Cost.**

VII. **Qualified Opportunity Zone (QOZ).** Whether the entity is located in an urban and economically distressed area including a Qualified Opportunity Zone (QOZ) or the proposed project will occur in a QOZ or otherwise advance the goals of QOZ. The goals include spurring economic development and job creation in distressed communities throughout the United States. For a list or map of QOZs go to: https://www.cdfifund.gov/opportunity-zones.

2. ARPA-E Reviewers

By submitting an application to ARPA-E, Applicants consent to ARPA-E's use of Federal employees, contractors, and experts from educational institutions, nonprofits, industry, and governmental and intergovernmental entities as reviewers. ARPA-E selects reviewers based on their knowledge and understanding of the relevant field and application, their experience and skills, and their ability to provide constructive feedback on applications.

ARPA-E requires all reviewers to complete a Conflict-of-Interest Certification and Nondisclosure Agreement through which they disclose their knowledge of any actual or apparent conflicts and agree to safeguard confidential information contained in Concept Papers, Full Applications, and Replies to Reviewer Comments. In addition, ARPA-E trains its reviewers in proper evaluation techniques and procedures.

Applicants are not permitted to nominate reviewers for their applications. Applicants may contact the Contracting Officer by email (ARPA-E-CO@hq.doe.gov) if they have knowledge of a potential conflict of interest or a reasonable belief that a potential conflict exists.

3. ARPA-E Support Contractor

ARPA-E utilizes contractors to assist with the evaluation of applications and project management. To avoid actual and apparent conflicts of interest, ARPA-E prohibits its support contractors from submitting or participating in the preparation of applications to ARPA-E.

By submitting an application to ARPA-E, Applicants represent that they are not performing support contractor services for ARPA-E in any capacity and did not obtain the assistance of ARPA-E's support contractor to prepare the application. ARPA-E will not consider any applications that are submitted by or prepared with the assistance of its support contractors.

C. ANTICIPATED ANNOUNCEMENT AND AWARD DATES

[TO BE INSERTED BY FOA MODIFICATION IN DECEMBER 2022]

VI. AWARD ADMINISTRATION INFORMATION

A. AWARD NOTICES

1. REJECTED SUBMISSIONS

Noncompliant and nonresponsive Concept Papers and Full Applications are rejected by the Contracting Officer and are not merit reviewed or considered for award. The Contracting Officer sends a notification letter by email to the technical and administrative points of contact designated by the Applicant in ARPA-E eXCHANGE. The notification letter states the basis upon which the Concept Paper or Full Application was rejected.

2. CONCEPT PAPER NOTIFICATIONS

ARPA-E promptly notifies Applicants of its determination to encourage or discourage the submission of a Full Application. ARPA-E sends a notification letter by email to the technical and administrative points of contact designated by the Applicant in ARPA-E eXCHANGE. ARPA-E provides feedback in the notification letter in order to guide further development of the proposed technology.

Applicants may submit a Full Application even if they receive a notification discouraging them from doing so. By discouraging the submission of a Full Application, ARPA-E intends to convey its lack of programmatic interest in the proposed project. Such assessments do not necessarily reflect judgments on the merits of the proposed project. The purpose of the Concept Paper phase is to save Applicants the considerable time and expense of preparing a Full Application that is unlikely to be selected for award negotiations.

A notification letter encouraging the submission of a Full Application does not authorize the Applicant to commence performance of the project. Please refer to Section IV.G of the FOA for guidance on pre-award costs.

3. FULL APPLICATION NOTIFICATIONS

[TO BE INSERTED BY FOA MODIFICATION IN DECEMBER 2022]

B. ADMINISTRATIVE AND NATIONAL POLICY REQUIREMENTS

[TO BE INSERTED BY FOA MODIFICATION IN DECEMBER 2022]

C. REPORTING

[TO BE INSERTED BY FOA MODIFICATION IN DECEMBER 2022]

VII. AGENCY CONTACTS

A. COMMUNICATIONS WITH ARPA-E

Upon the issuance of a FOA, only the Contracting Officer may communicate with Applicants. ARPA-E personnel and our support contractors are prohibited from communicating (in writing or otherwise) with Applicants regarding the FOA. This "quiet period" remains in effect until ARPA-E's public announcement of its project selections.

During the "quiet period," Applicants are required to submit all questions regarding this FOA to ARPA-E-CO@hq.doe.gov. Questions and Answers (Q&As) about ARPA-E and the FOA are available at http://arpa-e.energy.gov/faq. For questions that have not already been answered, please send an email with the FOA name and number in the subject line to ARPA-E-CO@hq.doe.gov. Due to the volume of questions received, ARPA-E will only answer pertinent questions that have not yet been answered and posted at the above link.

- ARPA-E will post responses on a weekly basis to any questions that are received that have not already been addressed at the link above. ARPA-E may re-phrase questions or consolidate similar questions for administrative purposes.
- ARPA-E will cease to accept questions approximately 10 business days in advance of each submission deadline. Responses to questions received before the cutoff will be posted no later than three business days in advance of the submission deadline. ARPA-E may re-phrase questions or consolidate similar questions for administrative purposes.
- Responses are published in a document specific to this FOA under "CURRENT FUNDING OPPORTUNITIES – FAQS" on ARPA-E's website (http://arpa-e.energy.gov/faq).

Applicants may submit questions regarding ARPA-E eXCHANGE, ARPA-E's online application portal, to ExchangeHelp@hq.doe.gov. ARPA-E will promptly respond to emails that raise legitimate, technical issues with ARPA-E eXCHANGE. ARPA-E will refer any questions regarding the FOA to ARPA-E-CO@hq.doe.gov.

ARPA-E will not accept or respond to communications received by other means (e.g., fax, telephone, mail, hand delivery). Emails sent to other email addresses will be disregarded.

During the "quiet period," only the Contracting Officer may authorize communications between ARPA-E personnel and Applicants. The Contracting Officer may communicate with Applicants as necessary and appropriate. As described in Section IV.A of the FOA, the Contracting Officer may arrange pre-selection meetings and/or site visits during the "quiet period."

B. DEBRIEFINGS

ARPA-E does not offer or provide debriefings. ARPA-E provides Applicants with a notification encouraging or discouraging the submission of a Full Application based on ARPA-E's assessment of the Concept Paper. In addition, ARPA-E provides Applicants with reviewer comments on Full Applications before the submission deadline for Replies to Reviewer Comments.

VIII. OTHER INFORMATION

A. TITLE TO SUBJECT INVENTIONS

Ownership of subject inventions is governed pursuant to the authorities listed below:

- Domestic Small Businesses, Educational Institutions, and Nonprofits: Under the Bayh-Dole Act (35 U.S.C. § 200 et seq.), domestic small businesses, educational institutions, and nonprofits may elect to retain title to their subject inventions;
- All other parties: The federal Non-Nuclear Energy Act of 1974, 42. U.S.C. 5908, provides that the government obtains title to new subject inventions unless a waiver is granted (see below):
  - Class Patent Waiver for Domestic Large Businesses: DOE has issued a class patent waiver that applies to this FOA. Under this class patent waiver, domestic large businesses may elect title to their subject inventions similar to the right provided to the domestic small businesses, educational institutions, and nonprofits by law. In order to avail itself of the class patent waiver, a domestic large business must agree to the U.S. Competitiveness Provision in accordance with Section VI.B.8. of this FOA.
  - Advance and Identified Waivers: For applicants that do not fall under the class patent waiver or the Bayh-Dole Act, those applicants may request a patent waiver that will cover subject inventions that may be made under the award, in advance of or within 30 days after the effective date of the award. Even if an advance waiver is not requested or the request is denied, the recipient will have a continuing right under the award to request a waiver for identified inventions, i.e., individual subject inventions that are disclosed to DOE within the time frames set forth in the award's intellectual property terms and conditions. Any patent waiver that may be granted is subject to certain terms and conditions in 10 CFR 784.
- DEC: On June 07, 2021, DOE approved a DETERMINATION OF EXCEPTIONAL CIRCUMSTANCES (DEC) UNDER THE BAYH-DOLE ACT TO FURTHER PROMOTE DOMESTIC MANUFACTURE OF DOE SCIENCE AND ENERGY TECHNOLOGIES. In accordance with this DEC, all awards, including sub-awards, under this FOA made to a Bayh-Dole entity (domestic small businesses and nonprofit organizations) shall include the U.S. Competitiveness Provision in accordance with Section VI.B.8 of this FOA. A copy of the DEC may be found on the DoE website. Pursuant to 37 CFR § 401.4, any Bayh-Dole entity affected by this DEC has the right to appeal it by providing written notice to DOE within 30 working days from the time it receives a copy of the determination.

B. GOVERNMENT RIGHTS IN SUBJECT INVENTIONS

Where Prime Recipients and Subrecipients retain title to subject inventions, the U.S. Government retains certain rights.

1. GOVERNMENT USE LICENSE

The U.S. Government retains a nonexclusive, nontransferable, irrevocable, paid-up license to practice or have practiced for or on behalf of the United States any subject invention throughout the world. This license extends to contractors doing work on behalf of the Government.

2. MARCH-IN RIGHTS

The U.S. Government retains march-in rights with respect to all subject inventions. Through "march-in rights," the Government may require a Prime Recipient or Subrecipient who has elected to retain title to a subject invention (or their assignees or exclusive licensees), to grant a license for use of the invention. In addition, the Government may grant licenses for use of the subject invention when Prime Recipients, Subrecipients, or their assignees and exclusive licensees refuse to do so.

The U.S. Government may exercise its march-in rights if it determines that such action is necessary under any of the four following conditions:

- The owner or licensee has not taken or is not expected to take effective steps to achieve practical application of the invention within a reasonable time;
- The owner or licensee has not taken action to alleviate health or safety needs in a reasonably satisfactory manner;
- The owner has not met public use requirements specified by Federal statutes in a reasonably satisfactory manner; or
- The U.S. Manufacturing requirement has not been met.

C. RIGHTS IN TECHNICAL DATA

Data rights differ based on whether data is first produced under an award or instead was developed at private expense outside the award.

- Background or "Limited Rights Data": The U.S. Government will not normally require delivery of technical data developed solely at private expense prior to issuance of an award, except as necessary to monitor technical progress and evaluate the potential of proposed technologies to reach specific technical and cost metrics.
- Generated Data: The U.S. Government normally retains very broad rights in technical data produced under Government financial assistance awards, including the right to distribute to the public. However, pursuant to special statutory authority, certain categories of data generated under ARPA-E awards may be protected from public disclosure for up to for up to ten years (or more, if approved by ARPA-E) in accordance with provisions that will be set forth in the award. In

addition, invention disclosures may be protected from public disclosure for a reasonable time in order to allow for filing a patent application.

D. PROTECTED PERSONALLY IDENTIFIABLE INFORMATION

Applicants may not include any Protected Personally Identifiable Information (Protected PII) in their submissions to ARPA-E. Protected PII is defined as data that, if compromised, could cause harm to an individual such as identity theft. Listed below are examples of Protected PII that Applicants must not include in their submissions.

- Social Security Numbers in any form;
- Place of Birth associated with an individual;
- Date of Birth associated with an individual;
- Mother's maiden name associated with an individual;
- Biometric record associated with an individual;
- Fingerprint;
- Iris scan;
- DNA;
- Medical history information associated with an individual;
- Medical conditions, including history of disease;
- Metric information, e.g. weight, height, blood pressure;
- Criminal history associated with an individual;
- Ratings;
- Disciplinary actions;
- Performance elements and standards (or work expectations) are PII when they are so intertwined with performance appraisals that their disclosure would reveal an individual's performance appraisal;
- Financial information associated with an individual;
- Credit card numbers;
- Bank account numbers; and
- Security clearance history or related information (not including actual clearances held).

E. FOAS AND FOA MODIFICATIONS

FOAs are posted on ARPA-E eXCHANGE (https://arpa-e-foa.energy.gov/), Grants.gov (http://www.grants.gov/), and FedConnect (https://www.fedconnect.net/FedConnect/). Any modifications to the FOA are also posted to these websites. You can receive an e-mail when a modification is posted by registering with FedConnect as an interested party for this FOA. It is recommended that you register as soon as possible after release of the FOA to ensure that you receive timely notice of any modifications or other announcements. More information is available at https://www.fedconnect.net.

F. OBLIGATION OF PUBLIC FUNDS

The Contracting Officer is the only individual who can make awards on behalf of ARPA-E or obligate ARPA-E to the expenditure of public funds. A commitment or obligation by any individual other than the Contracting Officer, either explicit or implied, is invalid.

ARPA-E awards may not be transferred, assigned, or assumed without the prior written consent of a Contracting Officer.

G. REQUIREMENT FOR FULL AND COMPLETE DISCLOSURE

Applicants are required to make a full and complete disclosure of the information requested in the Business Assurances & Disclosures Form. Disclosure of the requested information is mandatory. Any failure to make a full and complete disclosure of the requested information may result in:

- The rejection of a Concept Paper, Full Application, and/or Reply to Reviewer Comments;
- The termination of award negotiations;
- The modification, suspension, and/or termination of a funding agreement;
- The initiation of debarment proceedings, debarment, and/or a declaration of ineligibility for receipt of Federal contracts, subcontracts, and financial assistance and benefits; and
- Civil and/or criminal penalties.

H. RETENTION OF SUBMISSIONS

ARPA-E expects to retain copies of all Concept Papers, Full Applications, Replies to Reviewer Comments, and other submissions. No submissions will be returned. By applying to ARPA-E for funding, Applicants consent to ARPA-E's retention of their submissions.

I. MARKING OF CONFIDENTIAL INFORMATION

ARPA-E will use data and other information contained in Concept Papers, Full Applications, and Replies to Reviewer Comments strictly for evaluation purposes.

Concept Papers, Full Applications, Replies to Reviewer Comments, and other submissions containing confidential, proprietary, or privileged information should be marked as described below. Failure to comply with these marking requirements may result in the disclosure of the unmarked information under the Freedom of Information Act or otherwise. The U.S. Government is not liable for the disclosure or use of unmarked information, and may use or disclose such information for any purpose.

The cover sheet of the Concept Paper, Full Application, Reply to Reviewer Comments, or other submission must be marked as follows and identify the specific pages containing confidential, proprietary, or privileged information:

Notice of Restriction on Disclosure and Use of Data:

Pages [___] of this document may contain confidential, proprietary, or privileged information that is exempt from public disclosure. Such information shall be used or disclosed only for evaluation purposes or in accordance with a financial assistance or loan agreement between the submitter and the Government. The Government may use or disclose any information that is not appropriately marked or otherwise restricted, regardless of source.
The header and footer of every page that contains confidential, proprietary, or privileged information must be marked as follows: "Contains Confidential, Proprietary, or Privileged Information Exempt from Public Disclosure." In addition, every line and paragraph containing proprietary, privileged, or trade secret information must be clearly marked with double brackets or highlighting.

J. COMPLIANCE AUDIT REQUIREMENT

A prime recipient organized as a for-profit entity expending $750,000 or more of DOE funds in the entity's fiscal year (including funds expended as a Subrecipient) must have an annual compliance audit performed at the completion of its fiscal year. For additional information, refer to Subpart F of: (i) 2 C.F.R. Part 200, and (ii) 2 C.F.R. Part 910.

If an educational institution, non-profit organization, or state/local government is either a Prime Recipient or a Subrecipient, and has expended $750,000 or more of Federal funds in the entity's fiscal year, the entity must have an annual compliance audit performed at the completion of its fiscal year. For additional information refer to Subpart F of 2 C.F.R. Part 200.

IX. GLOSSARY

Applicant: The entity that submits the application to ARPA-E. In the case of a Project Team, the Applicant is the lead organization listed on the application.

Application: The entire submission received by ARPA-E, including the Preliminary Application, Full Application, Reply to Reviewer Comments, and Small Business Grant Application (if applicable).

ARPA-E: is the Advanced Research Projects Agency – Energy, an agency of the U.S. Department of Energy.

Cost Sharing: Is the portion of project costs from non-Federal sources that are borne by the Prime Recipient (or non-Federal third parties on behalf of the Prime Recipient), rather than by the Federal Government.

Deliverable: A deliverable is the quantifiable goods or services that will be provided upon the successful completion of a project task or sub-task.

DOE: U.S. Department of Energy

DOE/NNSA: U.S. Department of Energy/National Nuclear Security Administration.

FFRDCs: Federally Funded Research and Development Centers

FOA: Funding Opportunity Announcement

For-Profit Organizations (Other than Small Businesses) (or *large businesses*): Means entities organized for-profit other than small businesses as defined elsewhere in this Glossary.

GOCOs: U.S. Government Owned, Contractor Operated laboratories.

GOGOs: U.S. Government Owned, Government Operated laboratories.

Institutions of Higher Education (or *educational institutions*): Has the meaning set forth at 20 U.S.C. 1001.

Milestone: A milestone is the tangible, observable measurement that will be provided upon the successful completion of a project task or sub-task.

Nonprofit Organizations (or *nonprofits*): Has the meaning set forth at 2 C.F.R. § 200.70.

Prime Recipient: The signatory to the funding agreement with ARPA-E.

PI: Principal Investigator.

Project Team: A Project Team consists of the Prime Recipient, Subrecipients, and others performing or otherwise supporting work under an ARPA-E funding agreement.

Small Business: Small businesses are domestically incorporated entities that meet the criteria established by the U.S. Small Business Administration's (SBA) "Table of Small Business Size Standards Matched to North American Industry Classification System Codes" (NAICS) (http://www.sba.gov/content/small-business-size-standards).

Standalone Applicant: An Applicant that applies for funding on its own, not as part of a Project Team.

Subject Invention: Any invention conceived or first actually reduced to practice under an ARPA-E funding agreement.

Task: A task is an operation or segment of the work plan that requires both effort and resources. Each task (or sub-task) is connected to the overall objective of the project, via the achievement of a milestone or a deliverable.

Total Project Cost: The sum of the Prime Recipient share and the Federal Government share of total allowable costs. The Federal Government share generally includes costs incurred by GOGOs, FFRDCs, and GOCOs.

TT&O: Technology Transfer and Outreach. (See Section IV.G.8 of the FOA for more information).